An innovative communications system installed by the 121st Signal Battalion for the 1st Infantry Division provides . . .

C^3 that really is C^3

by Lt. Col. Patrick A. Bowman

After almost 17 full years of active duty, I was assigned to a division signal battalion as commander for the first time. Having had no previous experience and knowing that tactical communications — particularly for a REFORGER unit — are difficult to achieve, I took the assignment with a great deal of apprehension and foreboding. Fortunately, I was blessed with an outstanding team of dedicated officers, professional NCOs and willing soldiers; and after 19 months in command (as I write this) I feel this battalion is fully able to perform its combat mission.

In trying to develop a feasible, efficient and survivable command and control system, we stumbled upon four questions in a very lucky sequence. Responding to those questions as they came up eventually led to the development of a system which fully meets the needs of the 1st Division and which I feel is conceptually as good or better than any other system at division level. In implementing and operating our system, there are certainly problems. High personnel turnover rates; shortages of key MOSs, NCOs and officers; old equipment which is long overdue for rebuild; and many commitments which preclude lots of field practice time, for both the battalion and division staff, are all detractors to good field communications — and all are certainly present in the 1st Division. In addition, the 1st Division has one brigade (3rd Brigade 1st Infantry Division, Forward (1st IDF)) permanently stationed in Germany along with a platoon of people and equipment from B Company, 121st Signal Battalion. Thus, the division is not able to practice command, control and communications for the 3rd Brigade. Nonetheless, the system we've developed, installed and operated conceptually provides a mobile, reliable, flexible, survivable command and control system which maximizes user satisfaction while minimizing electronic warfare vulnerability without increasing deployed assets. It is my intention here to identify the questions addressed, the responses to the questions, a description of the system based upon those responses and a brief discussion of advantages and disadvantages.

Electronic warfare

The first school I attended as the incoming battalion commander was the Electronic Warfare (EW) Course at Fort Huachuca, Arizona. Thus, the first question the battalion dealt with was in EW.

After looking at the possible EW means available to the Soviets, I realized that to survive on the modern battlefield we must improve our EW posture. There were a number of problems I felt weren't addressed in the school. An article published in the ARMY COMMUNICATOR (AC) in January 1981 ("How We Can Communicate and Still Survive on the Modern Battlefield") and republished in the July/August 1981 *Journal of Electronic Defense* under the title "Battlefield Communications and Survival" addressed some of those EW holes.

Shortly after I took command of the battalion, we were deployed to Fort Irwin, California, to participate in Electronic Warfare/Close Air Support (EW/CAS V) Testing and Gallant Eagle '80. As a result, we articulated the first question: *How should we use the various communications means to design an effective, efficient communication system which minimizes our EW vulnerabilities?* With the current equipment and capabilities, we must focus on those means which provide the best communications, but which also make it as difficult as possible for the enemy to attack our system using EW techniques.

Of those electronic means available, Frequency Modulation (FM) radio, Amplitude Modulation (AM) radio and multichannel radio, the last provides the best communication

capability for most subscribers. The multichannel system provides voice, hard copy, (message over communication center circuits), and data (TACFIRE) traffic which have been bulk encrypted. Most of the key subscribers (except the cav squadron, engineer battalion, aviation battalion, air defense battalion and the military intelligence battalion) have direct access to this system such that it can satisfy most communications needs and requirements. Therefore, we must make multichannel work efficiently as the primary means of communications between the major subordinate commands, between the division and the major subordinate commands (brigades, DISCOM, DIVARTY), as well as from division up to corps.

In addition, multichannel is also the least vulnerable to EW techniques of any of the electronic communication means. The feature article in the Spring 1981 issue of AC ("Is Tactical LOS Radio Effective in Nuclear or Electronic Warfare?") might lead one to believe that multichannel (LOS) won't work in either the nuclear or EW environments. Granted, multichannel as well as any radio system is technically vulnerable to both the Electromagnetic Pulse (EMP) of a nuclear blast and to the various EW techniques (direction finding (DF), monitoring for intelligence, jamming and imitative communication deception (ICD)). However, I think multichannel is the least EW vulnerable communication means for the following reasons.

Before the enemy can effectively use EW, he must be able to electrically see/hear your signal. Once the signal is monitored, the enemy can decide how to use that signal. He can try to use DF techniques to locate and eventually attack the site where the signal is generated, he can continue to monitor to gain intelligence, or he can decide to jam the signal to prevent radio receivers from hearing the desired signal. It is also feasible for the enemy to use ICD on unsecured radio nets (i.e., use your system as though he were a friendly) to get you to do something stupid or at least to harass your efforts.

Thus, the first step in defeating enemy EW efforts is to prevent your signal from being monitored. Certain LOS characteristics — location of multichannel assets, the directional antennas and power output (less than

EQUIP	A Co	B Co	C Co	1st IDF
1. AN/TRC-145 24 ch. Terminal	10	10	6	6
2. AN/TRC-113 Relay	2	0	6	0
3. AN/TCC-65 Carrier	5	0	0	0

Figure 1. 121st Signal Battalion multichannel equipment available.

either FM or AM radios) all make it more difficult to find a multichannel signal. In addition, the bulk of the Soviet Radio Electronic Combat (REC) capability is ground based. The distance between our multichannel equipment and their EW assets will make it difficult for ground based equipment to detect/monitor the multichannel due to the curvature of the earth, other terrain features (terrain masking, especially in Europe) and power output.

Even if it is detected, it would be difficult to DF the signal since a DF base line is about 10 to 15 KM wide, and the likelihood that a directional multichannel transmitter 30 to 45 KM away would be electronically visible to three points on the 15 KM base line is remote. It would also be difficult to jam that signal due to the distance the enemy jammer must be from the receiver (normally at least 20 to 25 KM) and the fact that the directional receive antenna (normally at brigade) is probably 180° out of phase with the jammer signal. The receiver which faces the jammer (at the main or alternate main) is normally at least 30 to 40 KM from the jammer and the receive frequency wouldn't be known since the brigade transmit signal doesn't normally cross the FEBA. Also, all multichannel systems are encrypted, so they can't be monitored for intelligence, ICD techniques can't be used, and since the signal is continuous, traffic analysis is not available.

All of these factors would indicate that multichannel radio is not too vulnerable to enemy ground base EW assets. This is not the case, however, for airborne enemy EW assets. Certainly, the multichannel signal which crosses the FEBA (usually too high for ground based equipment to monitor) is vulnerable to airborne assets primarily for DF purposes. Since multichannel is a continuous transmit mode, it is also easy to identify. The airborne assets must be up in the air at a relatively high altitude and are therefore extremely vulnerable themselves to air defense systems. In addition, if the systems to the brigades go through relays (which will probably be the case in Europe), the enemy airborne DF will still not be able to determine the main or alternate main command post locations. Airborne jammers are also available, but they too are extremely vulnerable. Jamming to be effective takes time, and the longer that system is up and visible to air defense systems, the less likely it is to survive. The other radio means (FM/AM) are also just as vulnerable to airborne interception and the subsequent EW techniques.

Conclusion on EW vulnerability

The bottom line is that the division level command and control system should stress the use of multichannel communications. We should minimize the use of other electronic means. The first primary back up means should be FM and second should be RATT, again due to power, antenna considerations, and enemy REC capabilities.

When using either FM or RATT communications, we must utilize several techniques which will minimize vulnerability. Line-of-sight analysis, command post locations (near Signal centers with multichannel capability), remoting, FM relays, transmitting on the move, setting up broadcast (mobile stations) nets and other considerations can be very helpful in achieving a lower vulnerability posture for these means. Certainly, we must use messengers and liaison officers whenever possible, but this means it is not always timely or available on an immediate basis.

We must move CPs often, finding a good balance between lowering vulnerability to detection and keeping a

good communication/information system available to the commander. Considerations such as CP size, distance between the signal element and command element, installation times for CPs, and visual and infrared vulnerabilities must all be a part of the final equation of how often to move. Once these basic tenents are accepted, this leads to the next question concerning the employment of our bread and butter system.

Multichannel considerations

How should the multichannel equipment be used to provide the most flexible, reliable, mobile and survivable system? The multichannel equipment available by company is shown in Figure 1. We had to figure out how to employ this equipment in the most efficient manner.

We also have to insure that we have the capability to integrate the 3rd Brigade if we were deployed to Europe. The 3rd Brigade has six TRC-145s on hand but no relay equipment. Considerations for equipment employment are discussed below.

In the 121st Signal Battalion, each of the 26 TRC-145s (two-113s and two TCC-65s are issued in lieu of two additional TRC-145s) would terminate only one 12-channel system under normal operation. This gives us 100% back up for all systems and allows a better focus for installation, control and troubleshooting since the vans are small and cramped, and it is not feasible to work on two systems at the same time. Another advantage is that when a power failure occurs, only one system is lost instead of two. Additionally, having a back up system provides some insurance in the case of a large loss of equipment due to EMP.

The system also allows for jump capability since selected trucks, before a jump, could pick up a second system by simply connecting up the already erected antenna of the next rig and the 26-pair cable. This would allow the next rig to go to the jump location with two antennas; then it's a matter of putting up both antennas and getting both systems ready so that the systems at the old location can be shut down, and the antennas at the already established signal centers can then be swung to the new jump site. The truck from the old site would then move to the new site and assume one of the systems from the operational truck. This rig still has its antennas loaded and will be the one to jump to the next site.

Another important consideration is relays. Although not required often at Fort Riley, in Europe they would be critical to success. Three of the six relays available would probably have to be used to relay the Forward Area Support Center (FASC) systems to DISCOM due to distance and terrain consideration. That would leave only three relays to support the rest of the systems. Certainly, this is a potential weakness in any communication system planning.

Old multichannel system

The 121st used the system shown in Figure 2 when I assumed command. Was it the best system? After about 12 months, we felt it was not for a number of reasons.

First, this system is not really mobile because there is a large Main Command Post (CP) which is difficult to move without losing considerable multichannel control. In fact, DIVARTY and the TAC were completely dependent on FM or RATT during a move because all multichannel to them would be involved in the move of the main.

Second, although there is some alternate routing (brigade to FASC to

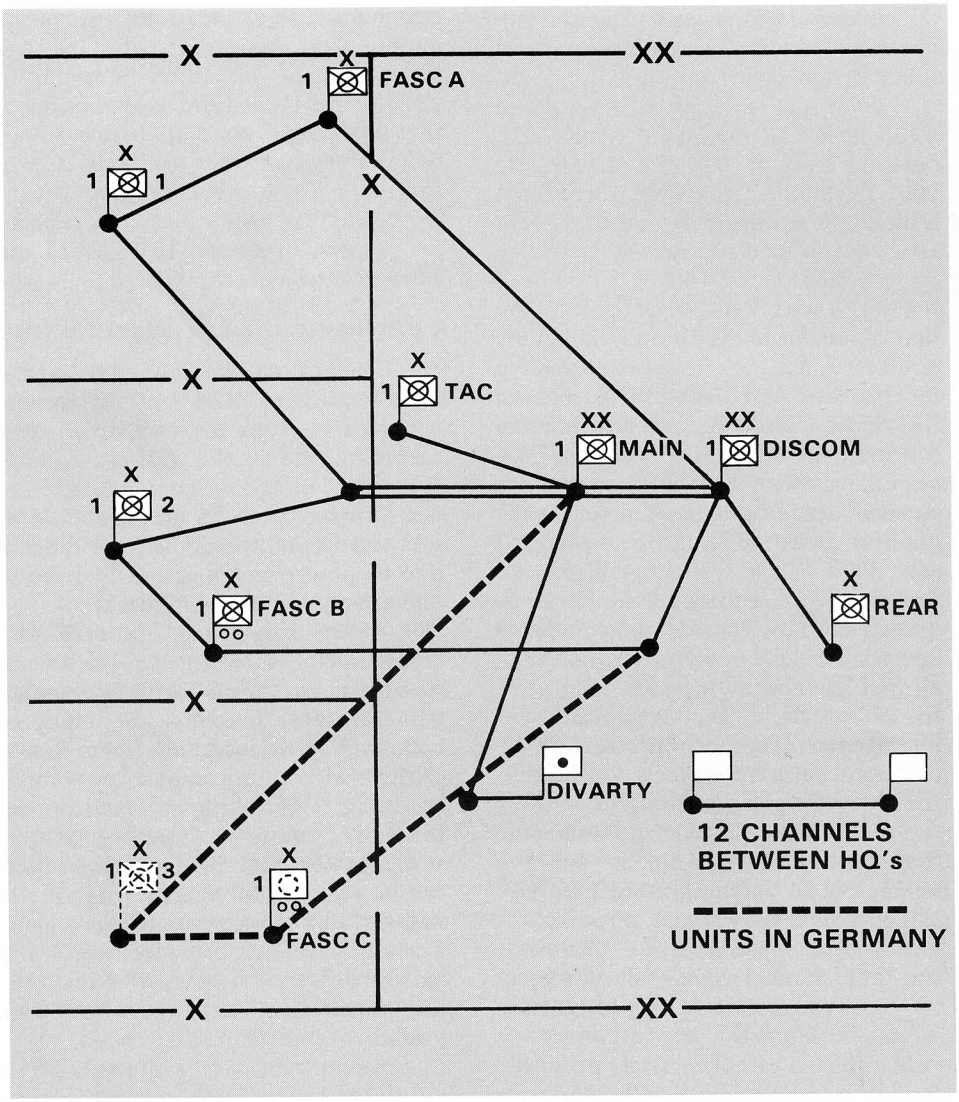

Figure 2. Old 1st Infantry Division multichannel network.

DISCOM to main), it is a long way around. If the shot to the brigade goes down, going the long way around through several switchboards is slow and not too reliable.

Third, the large main which doesn't move often is likely to be located and destroyed or at least damaged by the enemy. Once the main CP goes down, there is little left of the multichannel network. There were just too many problems with this system.

New multichannel system

We began looking at a number of alternate systems in use by the other divisions. We wanted to reduce the size of the main CP so that we could move it more often without totally disrupting communications. The system we eventually sold to the division is shown in Figure 3.

This new system has several major advantages. First, the main CP is reduced in size. Second, the alternate main/DIVARTY site allows moving the main without losing all multichannel to the MSCs and visa versa. Third, there are much better alternate routing capabilities available between all communication centers. The brigade commanders were not real happy since the new system eliminated a direct multichannel link between the brigade and the brigade trains. There is still access, but it means going through main and DISCOM before getting to the trains. The prime mission of the signal battalion is to provide communications from division to brigade. The direct link between the brigade main and trains is an internal brigade requirement which should not be a driving factor for the signal battalion to accomplish.

The new system would have the following LOS constraints for planning best overall utilization of available equipment:

LOS is required between the main, the alternate main (DIVARTY) and DISCOM.

Each brigade and the TAC would have to be LOS with at least one or the other of the main or alternate main (DIVARTY). There could be one relay to the non LOS CP.

Rear must be LOS with DISCOM.

FASCs must be within one relay of DISCOM.

The new system has been tried on several battalion exercises and during a major division command post exercise with considerable success. The main was moved while multichannel control was maintained at the alternate main and control of the division was exercised from the TAC. Rapid multichannel access to each MSC was continuously available throughout the exercises.

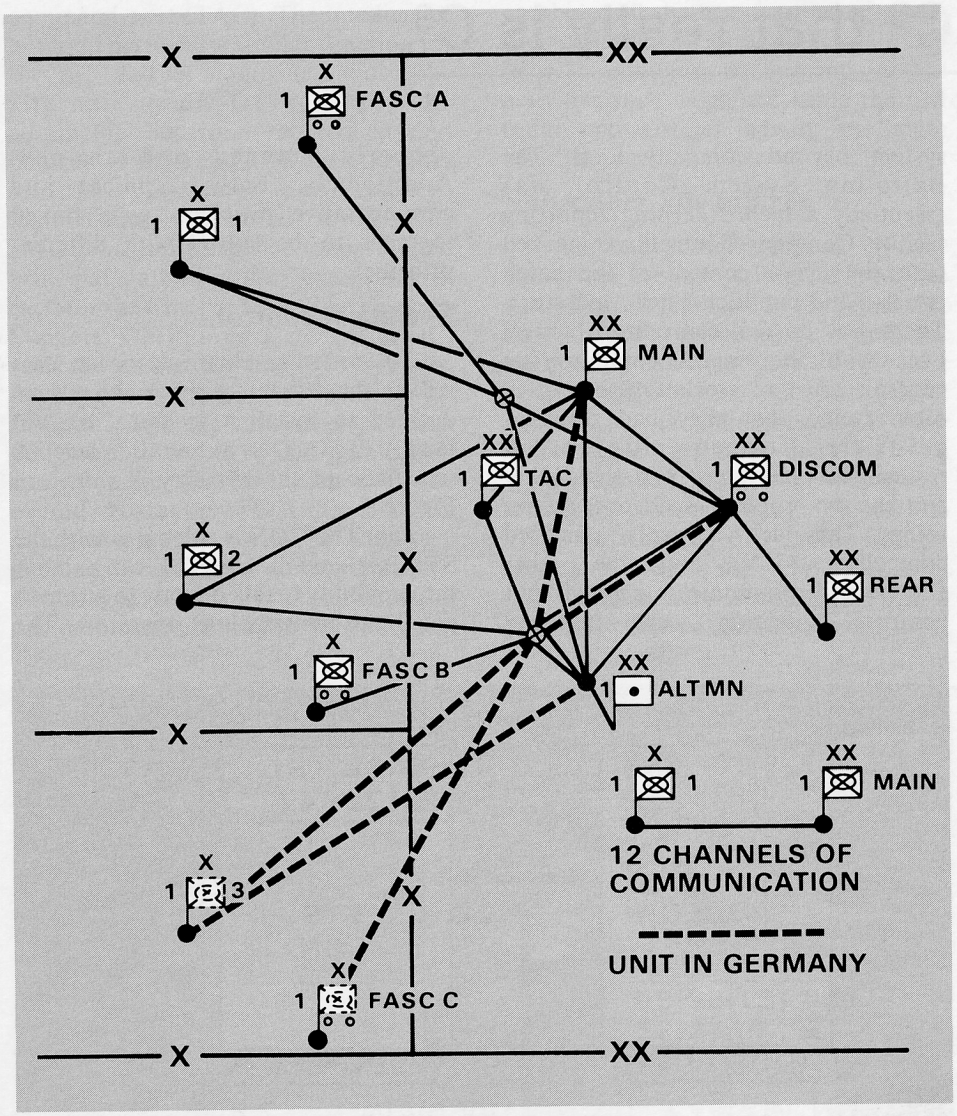

Figure 3. New 1st Infantry Division multichannel network.

Communications control

Once we decided on a specific system, we had to address the problem of how to keep current status as well as make the communication system more responsive. Thus, the question *"What is the best way to provide for communication control?"* needed an answer.

The inherited control system was a series of company/site operations reporting to a battalion system control (SYSCON - located in an MSC-31 van at the main CP). An additional MSC-31 van belonging to the division C-E office (colocated with SYSCON), provided a point of contact for subscribers and other division communications-electronics officers to surface communication problems. As problems were noted by the three Company Controls ("A" Co - Division Main, "B" Co - Bde HQs and FASC sites, and "C" Co - DISCOM), they were reported to SYSCON, and the various company/site operations involved took action to eliminate the outage. If problems were reported from outside the battalion (subscribers), which was often the case, the SYSCON would notify the appropriate company/site operations to fix the situation. A schematic of the old communications control network is shown in Figure 4.

There were many problems with this system; there was no real positive control over the actual communication

system beyond company level. The Battalion System Control was essentially a record keeping/reporting facility. Company Controls were tasked with the major control of the patch panels and multichannel operators. There was no real centralized control over troubleshooting. As company/site controls tried to work together, they often found that they had different priorities for communication restoration. They also had the "other end has the problem" syndrome all too often. The lack of truly qualified controllers (31N) and the other experienced communicators meant that company operations were often not properly manned and trained. Additionally, both technical and administrative problems were mixed together to be solved with different priorities.

Technical control

In order to eliminate or at least reduce the severity of the problems, we decided to install a technical control facility (TECCON) at battalion level. A schematic of the circuitry is shown in Figure 5.

TheTECCON is colocated with the SYSCON and division C-E van and has the capability to talk directly to all patch panel and multichannel operators. The Tec Con also has a set of circuit record cards which graphically and technically describe the exact circuit path for every circuit on every multichannel system. An experienced circuit controller can physically be inserted in any circuit in the multichannel system and can technically control actions taken in installation, operation or restoration of every circuit in the division.

The overall control system is now a combination of reporting/record keeping and handling administrative/command and control problems (fuel resupply/food/maintenance assistance) through the SYSCON, division C-E operations and company/site operations and the actual technical control of systems/circuits achieved through theTECCON Facility. Based on reporting to the SYSCON and the initial priorities, priorities for restoration are established by the SYSCON for the TECCON efforts. The information flow is shown in Figure 6.

Two or three high priority actions can be in progress at any one time. All operators respond directly to the TECCON once they are told that one of the circuits going through their equipment has TECCON priority. In the meantime, operators work with their local patch and company/site operations to install circuits/systems if they're not working on a TECCON priority. They operate their equipment in accordance with the current operations order and the battalion field SOP.

The TECCON, with the sharpest communicators, has been able to significantly reduce outage times and to improve overall responses on critical communications problems. Most of the "other end" problems are eliminated and there is certainly no question on the priority. Separation of the command and control/admin problems from the technical communications problems makes solving both easier. In general, the overall operation of the communication system has been improved significantly by the new control system.

User satisfaction

Once we were able to put together an efficient overall system, we began looking at providing better service to upgrade user satisfaction. *"How can we improve overall user satisfaction?"*

After having installed the above system several times, we realized that

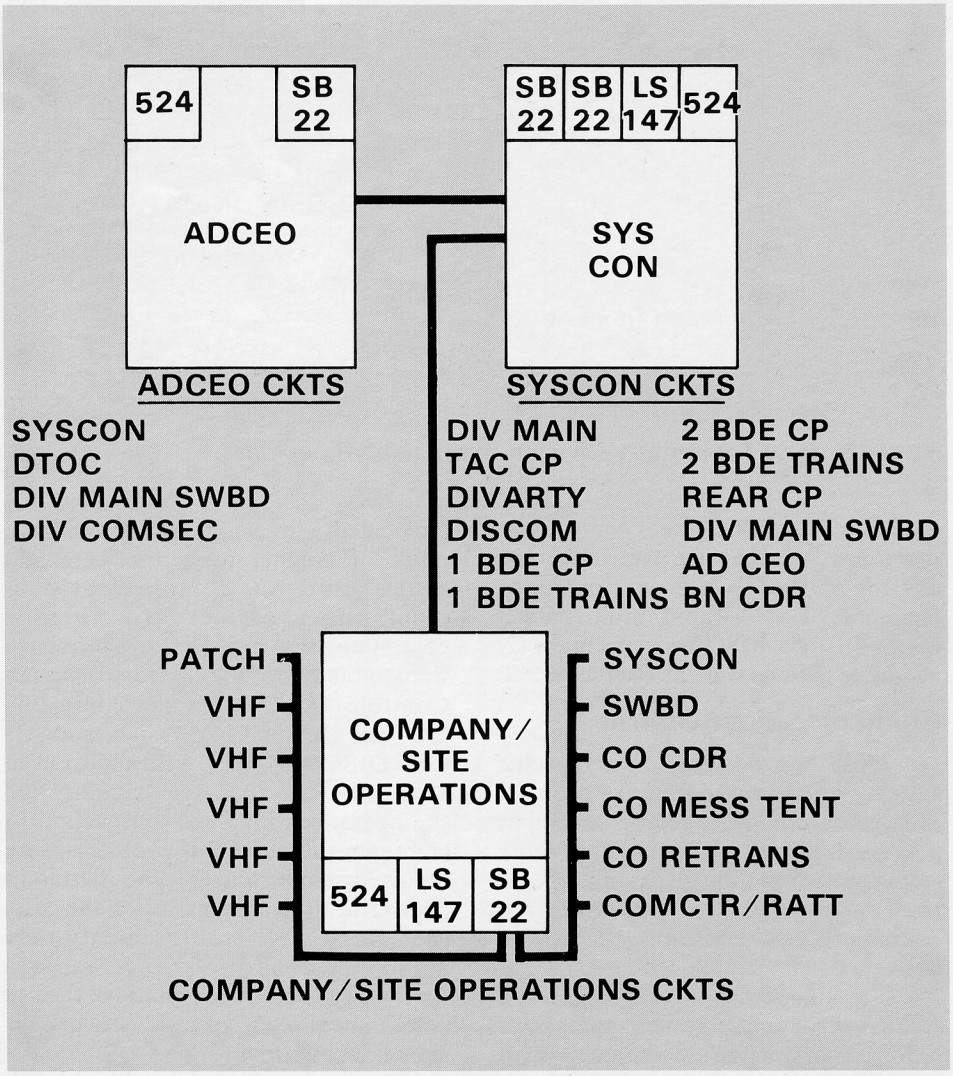

Figure 4. Old 1st Infantry Division communications control system.

there were a number of problems which really disturbed the users. Some of the problems could be addressed with better training. Others, however, needed to be examined from a technical standpoint. One of those was in the voice circuits which go through switchboards. Problems existed in both the sole user network (Division Tactical Operations Center (DTOC) Switch) and the common user network, both of which use manual switchboards.

At peak periods, it might take several minutes to get the operator to respond to a call. Subscribers would not wait that long. Often they would hang up and go to another phone which would just put another light up on the board. The subscribers would also revert to using an FM radio if available, which causes an increase in EW signature.

Several alternatives were examined. By eliminating the DTOC switchboard (sole user board) and installing point to point phones, we could eliminate the switchboard wait time, but we would drastically increase the number of phones installed and the installation and tear down time. We would also give the user a problem. With so many phones in an area, he would have difficulty deciding which is ringing and which to use. The solution which finally really solved the problem was simple and it provided numerous advantages to both the subscriber and the communicator. We named our solution Hot Loop.

Hot loop network

The hot loop is basically a voice intercom network which ties together the functional areas of the various command headquarters in the division. It is carried on the multichannel system; the end instrument is the GRA-39. It is secure in that the terminations are all in secured/controlled access areas (TOC s) and it is bulk encrypted on the multichannel system. The communication personnel who have access to the circuitry all have secret clearances. When one station in the loop is talking, all other stations hear what is said. In the 1st Infantry Division, we install three of these hot loops as shown in Figure 7 (less the 3rd Brigade in Germany).

The operations hot loop ties the G3 at the main TOC to all S3s in the brigades and DIVARTY as well as the G3 representative at the tactical command post (TAC). The intelligence hot loop performs a similar function for the G2 and is controlled from the alternate main/DIVARTY. The admin/log hot loop, controlled and patched at the DISCOM, ties together all the personnel and supply/maintenance functional areas. The DTOC has all three hot loops for the principal staff as well as extensions of each for the Chief of Staff. The Division Support Operations Center (DSOC) with the admin/log hot loop will also have access to the G2 and G3 hot loops. In addition to the subscribers of each hot loop, there is a communication control point ties into each net. The overall Battalion TECCON Facility monitors all three hot loops. This very simple concept offers some significant advantages to both the subscribers and communicators. Actually, this hot loop combines all the best features of a sole user conference call and the ability to have continuous monitoring of all activities such as gained using the FM radio net without having the main disadvantages of either.

Subscriber advantages

The advantages gained by the subscriber are many. First, it is easy to use. There's no need to remember switchboard designators, telephone numbers or call signs and no need to use codes, CEOIs or authentications. Second, it is quick because busy switchboard operators don't have to answer a call. Third, it is secure without setting the code and changing it every 24 hours as with the FM radio. Fourth, there's no need to use radio procedures and names can be mentioned. Fifth, it provides the continuous monitoring

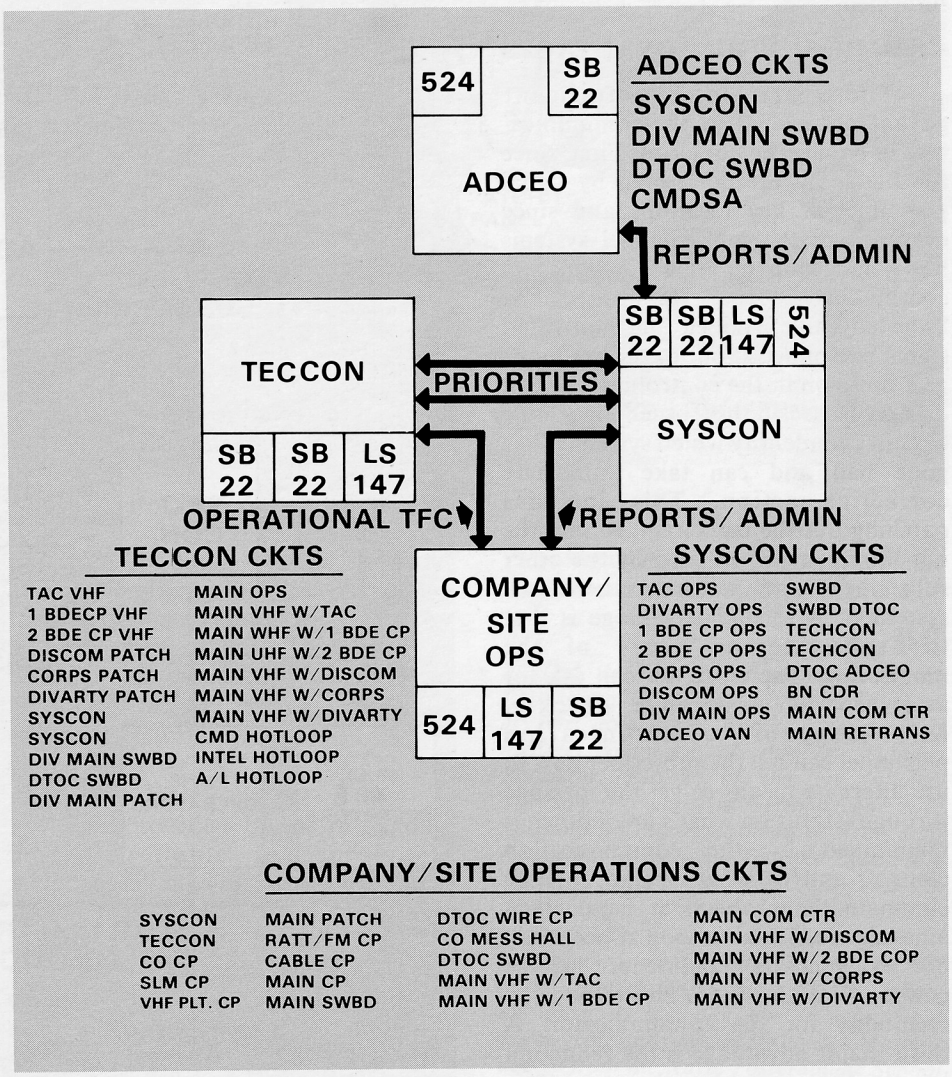

Figure 5. New 1st Infantry Division communications control system.

capability such that one transmission reaches everyone at the same time. Questions can be asked immediately and responses monitored. Thus, everyone monitoring is more knowledgeable of the total situation in a given functional area and can think ahead and plan better. At several locations (TOC, TAC, DSOC) two or three of these hot loops are installed in close proximity. A single person or small group of people can monitor all transactions on two or three of the loops. When something happens in the intelligence area which impacts operations, the knowledgeable person (the chief of staff, since he has all three hot loops available on his desk) can insure the operations hot loop is quickly informed.

COMMUNICATOR ADVANTAGES

There are some significant advantages gained by the communicators in having the hot loops. First, since the hot loops are monitored by signal personnel at key locations and since everyone of the multichannel systems has a hot loop on it, all systems are continuously being monitored by knowledgeable, trained and motivated signal personnel. If one of the hot loops gets noise on it, the controlling site can quickly check the other available circuitry to identify which system(s) has gone bad and can take immediate corrective action. This includes patching out the bad circuit so that the hot loop can still be used by the other subscribers and restoring the down system(s). A second advantage is that the subscriber is aware of the monitoring. Therefore, he can ask for and receive assistance quickly. Knowledgeable communication personnel can tell the subscriber how to use alternate means to get the message through (status on what's up or down is maintained by the communication control) and/or what's being done to eliminate the problem at hand. It is amazing what the hot loop concept can do to generate confidence in the communication system and to develop credibility for the communicator. A third major advantage is the reduction in use of the switchboard system. This occurs in two ways. The subscriber wants to use the hot loop because it is easier and he only has to say it once instead of having to make several calls. Second, we have been able to significantly reduce the number of end instruments installed. This not only helps lower the switchboard load, but it also reduces installation and tear down time for the command posts.

COST OF HOT LOOP NETWORK

Even though the hot loops provide lots of overall advantages, it must be recognized that there is a cost associated and there are some weak points in the system.

First, the GRA-39 is not really designed for this use. The hot loop requires only the remote unit of the GRA-39. The local is not used. Thus, an expensive piece of equipment is only partially used. In addition, the remote unit goes through BA-30 batteries very fast. With the large number of remotes used (30-40), lots of batteries go in a hurry. The hot loops also require forty GRA-39s. These instruments are not available in the signal battalion but are needed for training purposes. These 39s must be taken out of hide (other units in the division) until some other instrument or means is made available.

A second disadvantage is that special training is required for multichannel operators, patch panel operators and communications control personnel. Training them to operate the normal system is difficult enough. This makes the job harder. The 121st Signal Battalion requires about four hours of special instruction before each major exercise on hot loop installation, operation and troubleshooting. This has

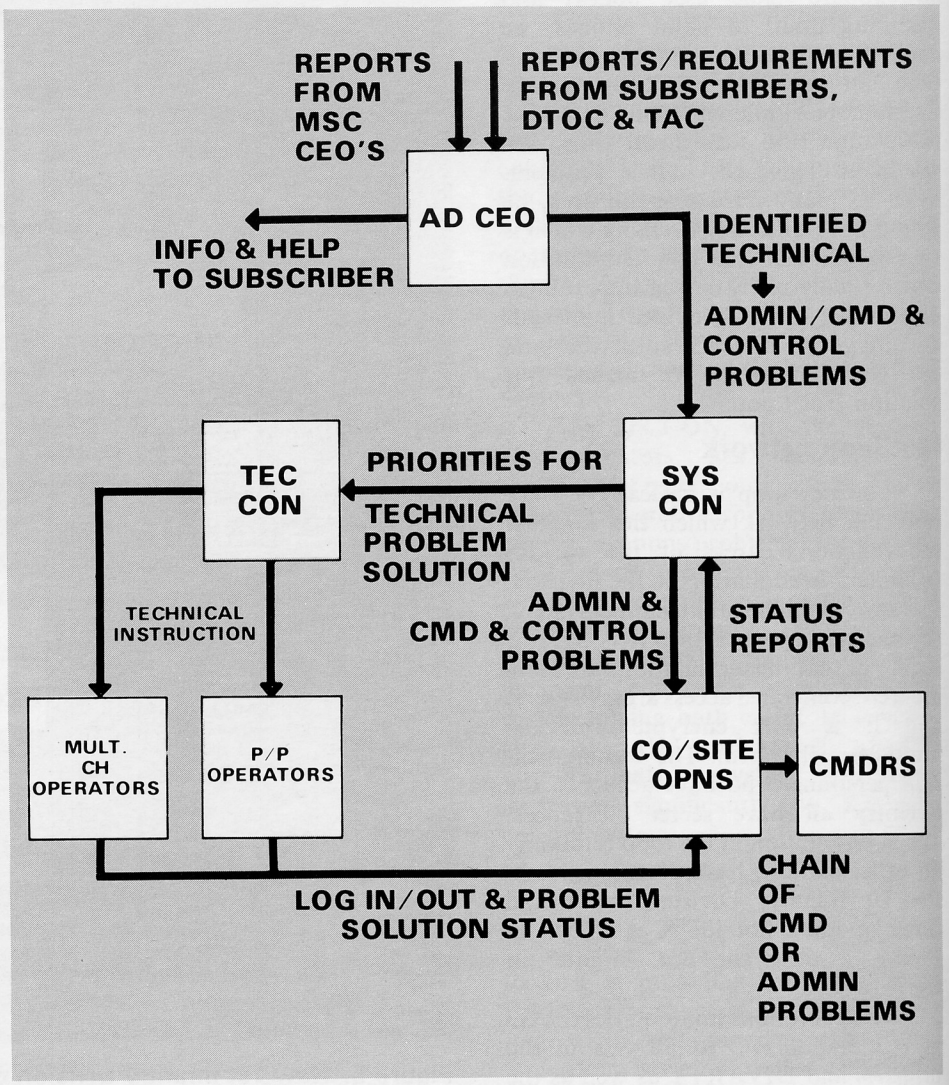

Figure 6. Information flow in the communications control network.

provided sufficient instruction to get the job done satisfactorily and the pay-off is well worth the training cost.

A third disadvantage is the fact that the signal control facilities must now be limited access areas because the hot loops are monitored in these areas. This is a considerable administrative cost as barbed wire, access rosters, guards, and so on are now required. Again, we feel the cost is justified.

A possible fourth disadvantage is that with heavy traffic and a lot of subscribers, it may be possible to overload the network with traffic. This really shouldn't happen since there is a definite pecking order among the subscribers just as there is in an FM radio net. In addition, there are less subscribers on the hot loops than in most radio nets, so again, overload should not occur. Also, the control subscriber, such as the G3 for the operations hot loop, can determine what traffic is to be passed on the loop. Therefore, this should be more of a concern than a disadvantage.

The hot loop network also does not include the capability for the brigade commander/staff to talk directly over the admin log hot loop. We tried to install these stations but ran into technical problems. There was just too much circuit loss in the routing of the admin log hot loop through four signal centers (brigade, alternate main, DISCOM and brigade trains). Engineering of the admin log hot loop also took too long in trying to extend the circuit forward to the brigades. The circuit when extended, could be used in a relay mode. For example, the SPO at DISCOM could relay the information between the brigade headquarters and brigade trains. As such, the extension of the circuit is not recommended. The common user telephone system is available. With reduced usage, the common user network will be more responsive so that this is the more effective way to satisfy brigade headquarters to brigade trains communication.

An additional consideration is that we have not tried the hot loop network for a full three brigade division. We have looked at the requirement and think it can be accomplished fairly easily. We would only be adding three additional end instruments/circuits (one each to ops, intell and admin log hot loops). This will require some simple modification to the mult strip jacks in the TSC-76 patch panels at main, alternate main and DISCOM (changing three series jacks to be wired directly into the mult jack system). Thus, we think we can extend this system to an additional brigade without losing the system effectiveness.

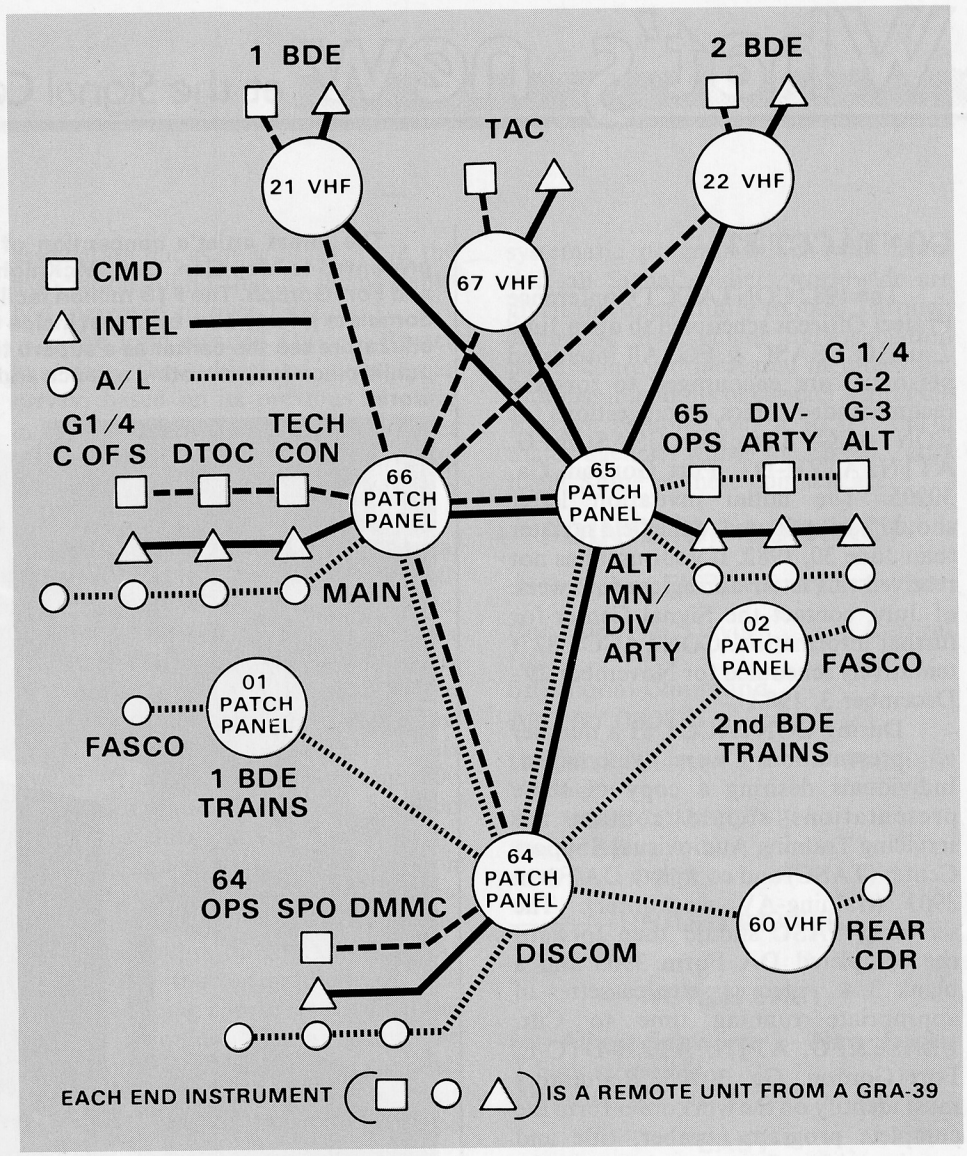

Figure 7. Hot loop network.

Summary

Tying together the more flexible, mobile, reliable and survivable multichannel network with the control system of a SYSCON and TECCON facilities and adding the hot loops has provided an excellent command and control communication concept. In conjunction with implementing numerous other techniques to minimize EW vulnerability, particularly for FM and RATT/AM voice means, we are convinced that the 1st Division and the 121st Signal Battalion can communicate and survive on the modern battlefield.

AC

Lt. Col. Bowman is the commander of the 121st Signal Battalion, 1st Infantry Division, at Fort Riley, KS. Previous assignments include command of the 1st Support Battalion (PROV) of the 1st Infantry Division (Forward) in Germany and staff positions on the Department of Army staff and at the Operational Test and Evaluation Agency, where he was involved in developing new communications systems and in fielding of Army tactical data systems. Bowman was commissioned through ROTC at the University of Texas in El Paso, where he earned BS degrees in electrical engineering and physics. He holds a Master's degree from the Naval Postgraduate School and is a graduate of both the Armed Forces Staff College and the Command and General Staff College.