Supporting the Patriot deployment to Korea

by MAJ Juan B. Soto

To air defense communicators the challenge was to extend Patriot's network beyond its organic line-of-sight radio range.

On March 21, 1994, President Bill Clinton decided to deploy a Patriot battalion to the Republic of Korea (ROK). This unprecedented decision was in response to an earlier request from GEN Gary Luck, Commander, U.S. Forces Korea, to permanently deploy Patriot assets to ROK as a defensive measure against the growing tactical ballistic missile threat posed by North Korea. The 2nd Battalion, 7th Air Defense Artillery, 11th ADA Brigade (the "Original" Scudbusters of the Gulf War), was selected to execute this important mission. 2-7 ADA holds the distinction of being the first ADA unit to engage a hostile tactical ballistic missile in flight (Jan. 17, 1991).

The mission required the unit to cover three critical assets spread over a large geographical area. To air defense communicators the challenge was even greater: extend Patriot's network beyond its organic line-of-sight radio range. To communicators supporting other branches or elements, the solution seems simple: use existing satellite and troposcatter radio system to cover the longer distances.

But ADA communicators know better. They know that the time delays induced by satellite communications adversely affect Patriot's multirouting software. They also know that the asynchronous Patriot Digital Link (PADIL) is simply not compatible with the synchronous transmission technique used by the TRC-170 Troposcatter Radio System. To complicate matters a bit more, both the brigade and battalion commander expressed a common interest as a result of security concerns: link all battalion elements without tactically employing any relays or Patriot shelters outside the boundaries of the three critical assets.

2-7 ADA's successful deployment not only marks the first operational stationing of Patriot assets in Korea, it also marks the first time a single information coordination central (ICC) has controlled six engagement control stations (ECSs) positioned well beyond its organic line-of-sight radio range in an operational setting. What follows is an account of the manner in which 2-7 ADA successfully met these requirements.

Background

Before covering the nonstandard communications network the unit employed, it is important to review the standard communications doctrine used by the Patriot system as well as previous research conducted to extend its range.

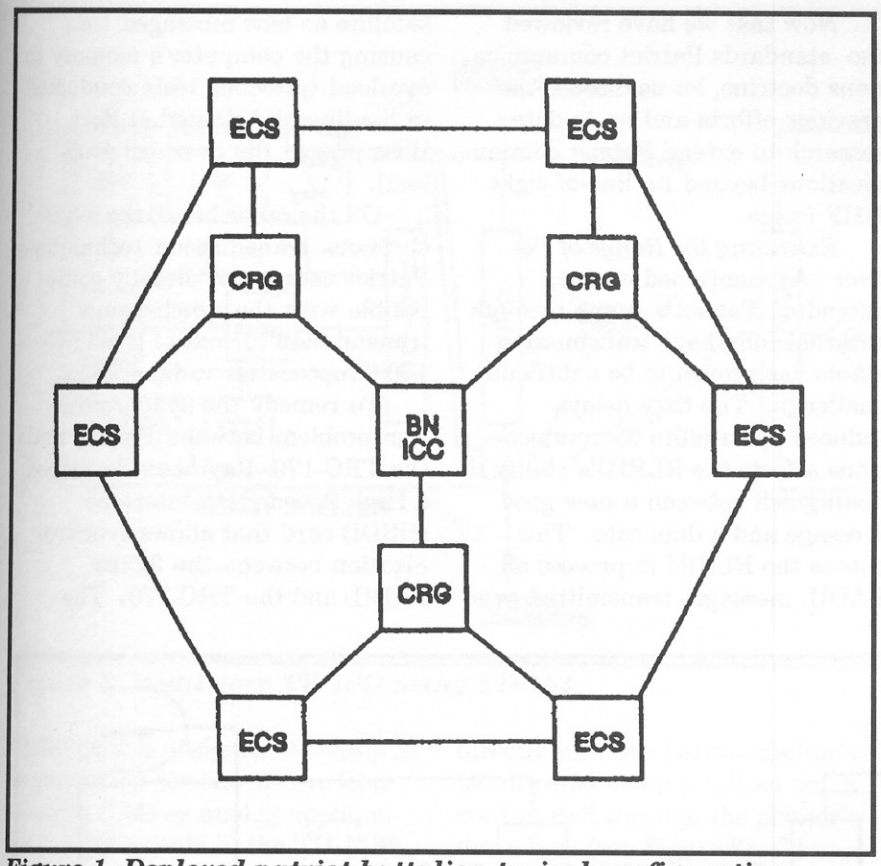

Figure 1, Deployed patriot battalion typical configuration

Patriot Communications: Patriot communications depend primarily on the installation of four fire control circuits, a communications engineering and troubleshooting circuit, and common user switching trunks (or phones) off an automatic switchboard. A brief description of each circuit follows.

The PADIL is the highest priority circuit installed within the Patriot system. PADIL is a secure point-to-point asynchronous 32 kilobits-per-second (kb/s) data circuit used to exchange information between the Patriot battalion and its batteries. This circuit terminates in the routing logic/radio interface unit (RLRIU), which in turn hands off PADIL messages to the weapons control computer (WCC) for display on the ICC and ECS scopes. The RLRIU in each Patriot shelter receives, processes and transmits (multiroutes) PADIL messages throughout the network.

Party Line #1 (PL-1) is a secure conferenced analog voice net that allows battalion tactical directors (TDs) to speak to a higher control element and to TDs from other Patriot battalions. The circuit terminates in the headset of the TDs and remains continuously open.

Party Line #2 (PL-2), also a secure conferenced analog voice net, allows the battalion TDs to speak to the tactical control officers (TCOs) of each firing battery. The circuit terminates in the headset of TDs and TCOs and remains continuously open. A communications panel allows TDs to selectively connect their handset to the desired party line.

Party Line #3 (PL-3) is a secure conferenced analog voice net that allows Patriot communicators (MOS 31M) to monitor and troubleshoot the communications circuits. The circuit terminates in the headset of the Patriot communicator and remains continuously open.

The message pass line (MPL) is a secure conferenced voice circuit used to send airspace and weapons control orders. The MPL can be a dial-up circuit with conferencing capability using tactical phones or a hot loop of analog phones. These phones are normally located at the battalion tactical operations center (BTOC) and at each battery command post (CP).

Common user circuits are tactical voice circuits (phones/fax) that allow subscribers (command and staff) to access the tactical switched network. These tactical phones are located at the BTOC and battery CPs.

Connectivity within Patriot is established through line-of-sight UHF radio systems. Patriot fire control shelters have three organic multichannel stacks using Band III GRC-103 radios, TD-660 multiplexers, TD-1065 digital data buffers and KG-94/194 trunk encryption devices. A single CV-1548 telephone signal converter allows the shelter to terminate 12 circuits locally. An internal patch panel allows Patriot communicators in each shelter to route all circuits to the various interface devices (such as RLRIU, wire lines, party lines).

Additionally, the Patriot battalion is complemented with communications relay groups (CRGs) each containing four multichannel stacks similar to those in the ICC and ECS. The CRG allows range extension and multiple links for network robustness. It is important to acknowledge that these assemblages are an integral part of the Patriot weapon system and thus are not included in TC 24-24, *Signal Data References: Communications-Electronics Equipment.*

By having multiple links between shelters (see the typical configuration of a deployed battalion in Figure 1), PADIL messages are multirouted using flood search techniques. The RLRIU transmits and receives all

PADIL messages within each ICC, ECS and CRG and acts as a repeater for PADIL messages addressed to other shelters. The RLRIU validates each message received and determines if the message is a first good message or a duplicate from a previous transmission. The RLRIU processes all first good messages and discards the duplicates. Discarding the duplicates prevents them from being multirouted indefinitely throughout the network. Each RLRIU is capable of handling four data circuits with other Patriot shelters and with a higher control element.

Now that we have reviewed the standards Patriot communications doctrine, let us discuss the previous efforts and up-to-date research to extend Patriot communications beyond its line-of-sight UHF range.

Extending the Range of Patriot. As mentioned earlier, extending Patriot's range through external long-haul transmission assets has proven to be a difficult challenge. The time delays induced by satellite communications affects the RLRIU's ability to distinguish between a new good message and a duplicate. This causes the RLRIU to process all PADIL messages transmitted over satellite as new messages, thus causing the computer's memory to overload (previous tests conducted in Southwest Asia and at Fort Bliss proved the overload problem).

On the other hand, the asynchronous transmission technique Patriot uses is not directly compatible with the synchronous transmission format of the TRC-170 Troposcatter radio system.

To remedy the synchronization problem between Patriot and the TRC-170, Raytheon developed a High Speed Data Interface (HSDI) card that allows synchronization between the 32kbs PADIL and the TRC-170. The

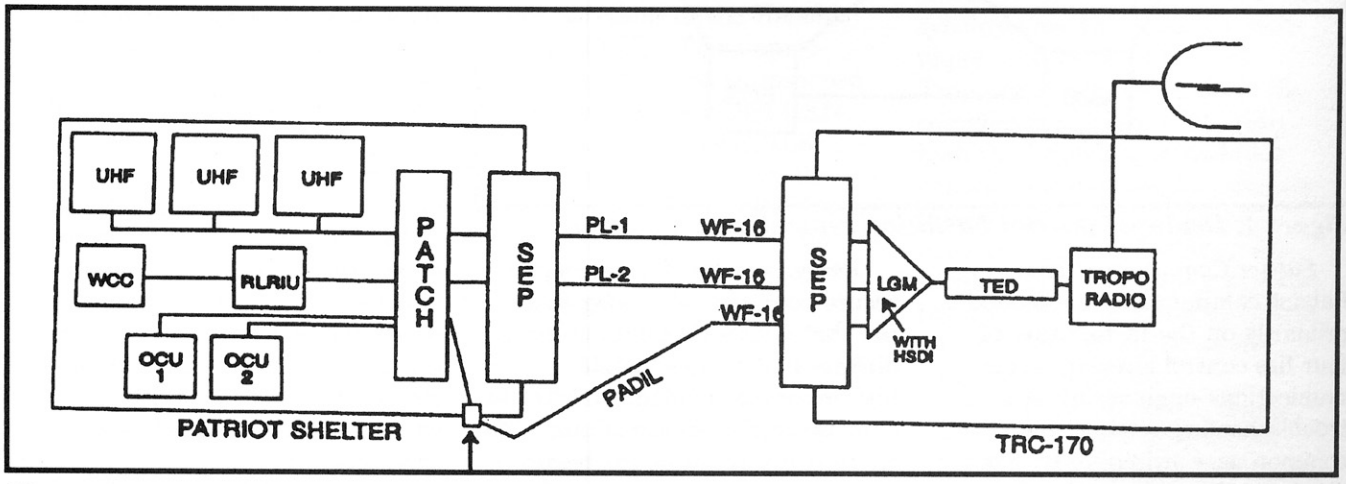

Figure 2, Padil over TROPO using HSDI (no line filters).

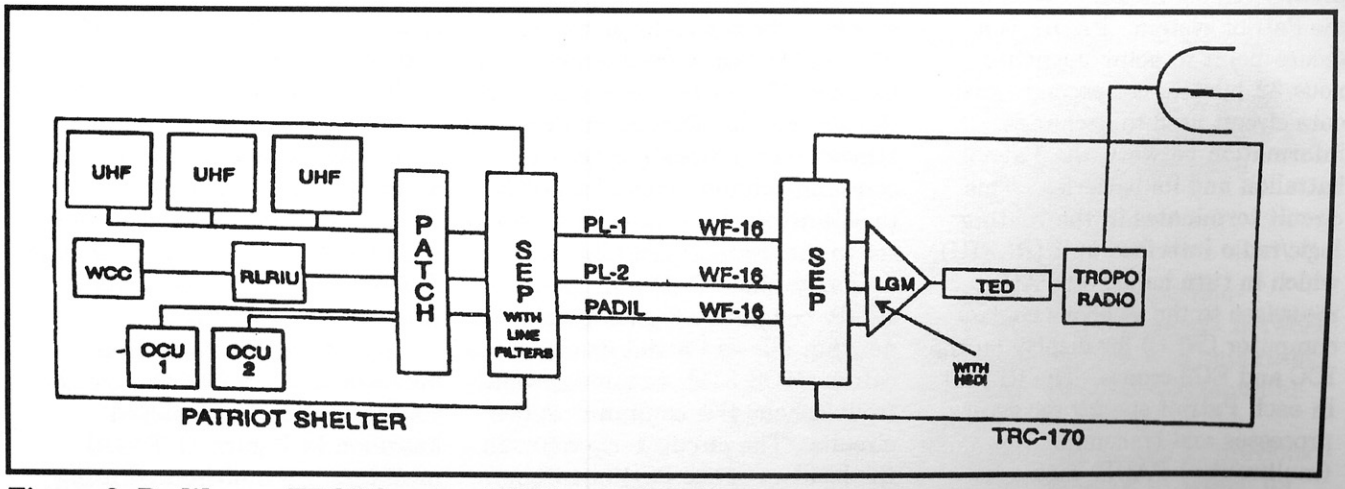

Figure 3, Padil over TROPO using HSDI and line filters.

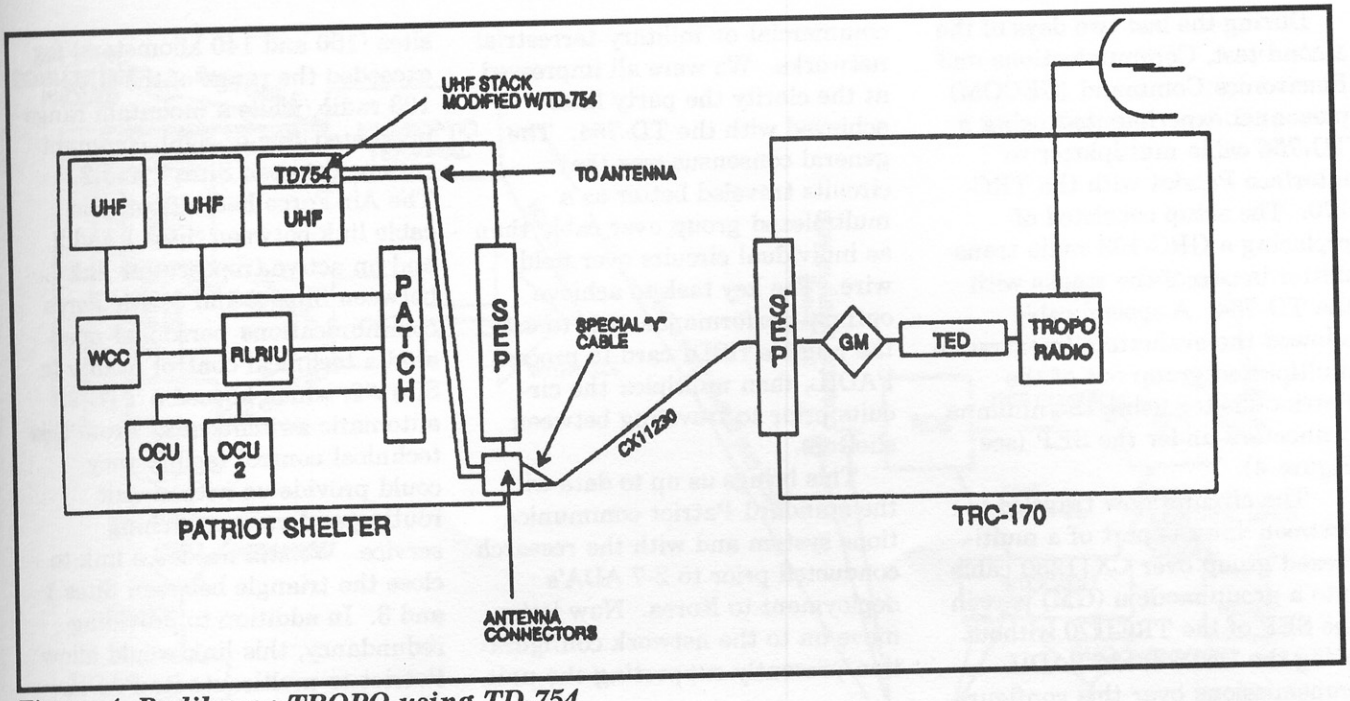

Figure 4, Padil over TROPO using TD-754

HSDI card is designed as a drop in replacement for one of the loop modem (LM) or analog applique unit (AAU) cards in the TD-1235 loop group multiplexer (LGM) in the TRC-170. Installation of the HSDI card takes approximately five minutes and requires no special training or tools.

The 11th ADA Brigade successfully field tested the HSDI card during Exercise Roving Sands in May 1993 by passing PADIL between Patriot shelters using three different Tropo links. The Patriot Project Office (PPO) reconfirmed the initial test results during a field test held at Fort Bliss the week prior to 2-7 ADA's deployment.

The standard set up during both tests linked the TRC-170 to an ICC or ECS via WF-16 field wire. The evaluators installed three circuits: PADIL, PL-2 and PL-3 with a distant ECS over Tropo. During both tests, the party lines were installed directly into the signal entry panel (SEP) of the Patriot shelter. The main difference between the two tests concerned the installation of PADIL.

During the first test, the PADIL circuit was installed directly into the Patriot shelter's patch panel using a spliced patch cord routed through the shelter's drain hole (see Figure 2). The reason for this awkward technique is that the bandwidth of line filters installed in the SEP--analog filters designed more than 20 years ago--is significantly less than the bandwidth required for PADIL.

During the second test, Raytheon installed special filter units that allowed the PADIL circuit to be installed directly into the SEP along with the party lines (see Figure 3).

Test results confirmed the reliability of the data passed between the Patriot shelters. The party lines, on the other hand, were initially very noisy. By grounding the TRC-170 and the Patriot shelter to a common ground, we reduced the background noise to a level comparable to normal operations.

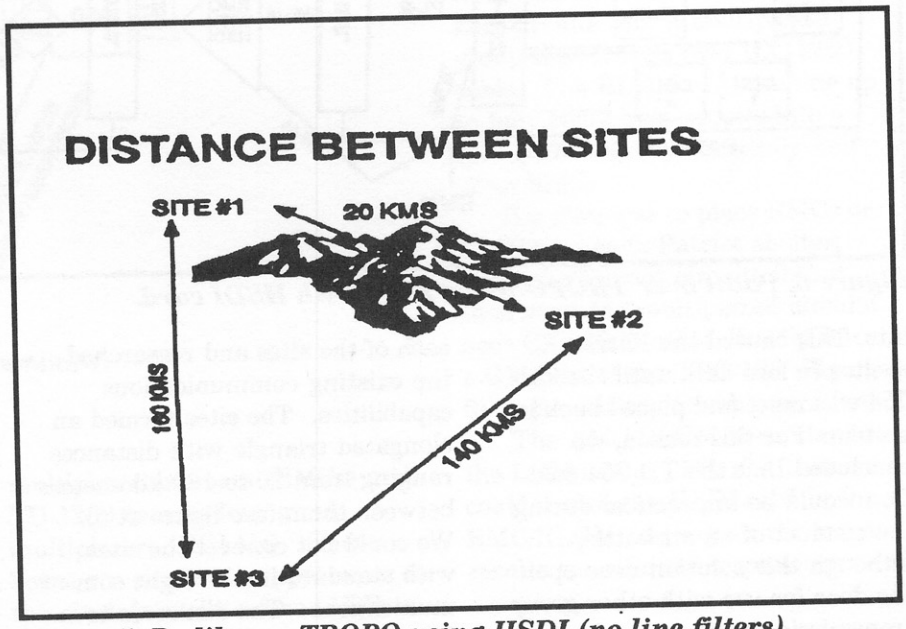

Figure 5, Padil over TROPO using HSDI (no line filters)

During the last two days of the second test, Communications and Electronics Command (CECOM) personnel experimented using a TD-754 cable multiplexer to interface Patriot with the TRC-170. The setup consisted of replacing a GRC-103 radio transmitter in one of the stacks with the TD-754. A special cable allowed the evaluators to extract a multiplexed group out of the Patriot shelter using the antenna connectors under the SEP (see Figure 4).

The circuits now traveled between vans as part of a multiplexed group over CX11230 cable into a group modem (GM) port in the SEP of the TRC-170 without using the HSDI card. PADIL transmissions over this configuration were reliable and the party lines were very clear.

The problem with the TD-754 solution is that it would lose synchronization whenever the tropo system took propagation hits. This caused the Patriot shelter to lose data until the TD-754 was reset and placed back in system. For this reason, we concluded that the TD-754 solution would be impractical during the conduct of an air battle, although this solution does open the door for use with other group transmission systems, such as commercial or military terrestrial networks. We were all impressed at the clarity the party lines achieved with the TD-754. The general consensus was that circuits traveled better as a multiplexed group over cable than as individual circuits over field wire. The key task to achieve optimal performance was to use the reliable HSDI card to process PADIL, then multiplex the circuits prior to traveling between shelters.

This brings us up to date with the standard Patriot communications system and with the research conducted prior to 2-7 ADA's deployment to Korea. Now let's move on to the network configuration presently supporting the unit.

The plan

Immediately after receiving the order to deploy, the 11th ADA Brigade organized a liaison party to travel to Korea and conduct advanced coordination. We visited each of the sites and researched the existing communications capabilities. The sites formed an elongated triangle with distances ranging from 20 to 160 kilometers between them (see figure at 5). We could not connect the sites with standard line-of-sight communications. The distances to Site 3 from each of the other two sites (160 and 140 kilometers) far exceeded the range of the GRC-103 radio, while a mountain range prevented line-of-sight communications between Sites 1 and 2. The Air Force had a fiberoptic cable link between Sites 1 and 2 and an active troposcatter link between Sites 2 and 3. Air Force communications personnel operated a technical control facility in Site #2, which housed a TTC-39 automatic switchboard. From this technical control facility they could provide us with circuit routing and voice switching service. We still needed a link to close the triangle between Sites 1 and 3. In addition to providing redundancy, this link would allow Patriot to multiroute its PADIL messages. The liaison team then requested two TRC-170 teams from Forces Command prior to leaving country. The 11th Signal Brigade provided the additional TRC-170 teams.

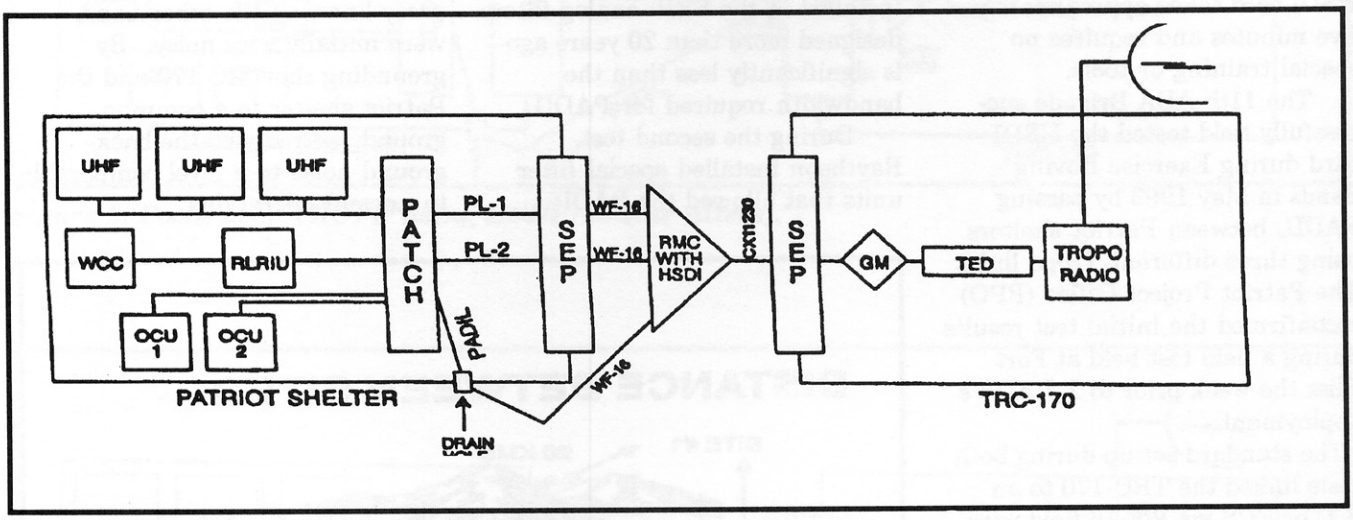

Figure 6, Padil over TROPO using RMC with HSDI card.

The next step was to interface Patriot to the planned network. Shortly after completing the second Tropo-PADIL test, we organized a group of communicators to travel to Korea and assist in the network installation. Upon arrival in country, we linked up with the battalion communicators and with the Air Force tech

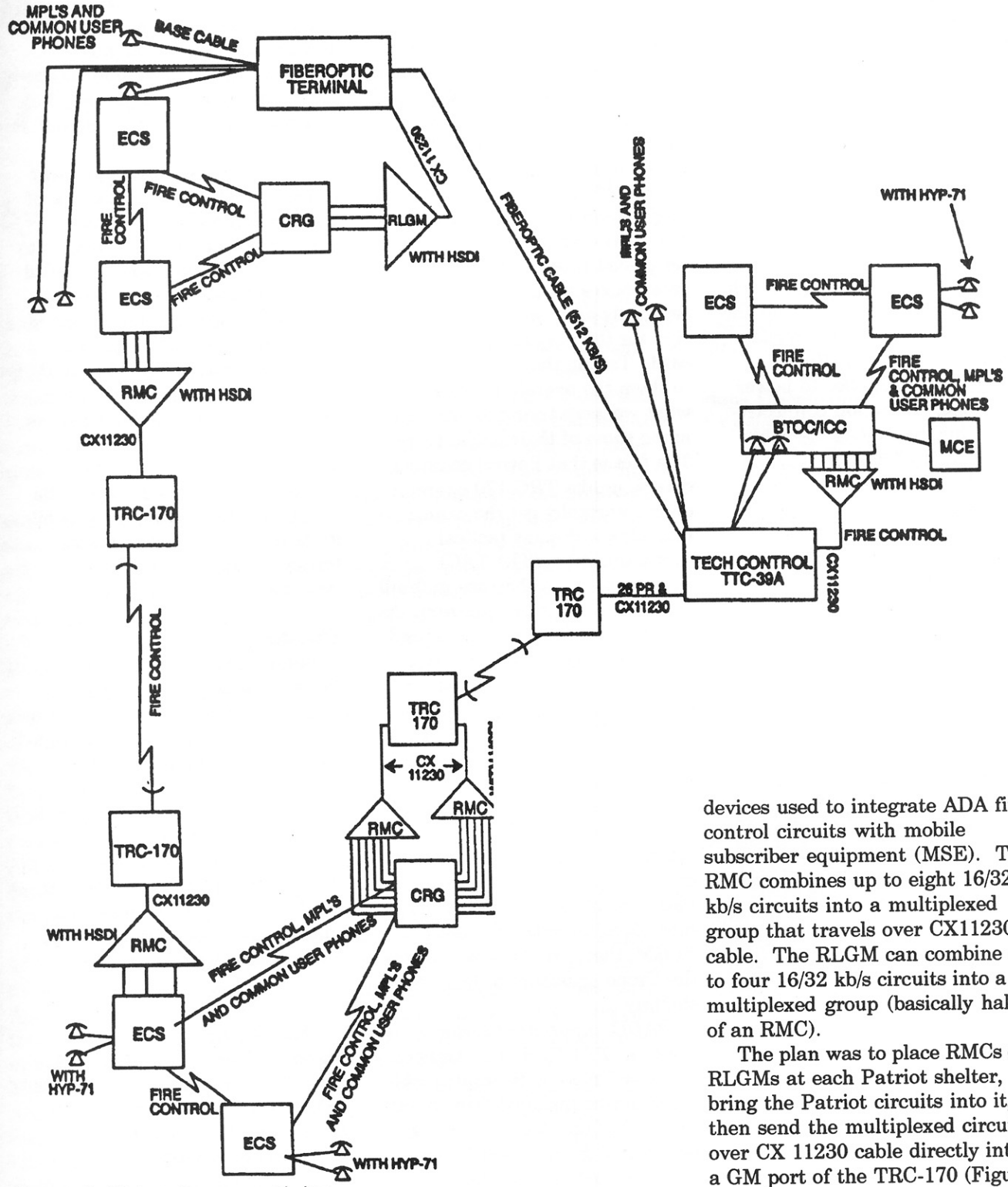

Figure 6, Network connectivity.

controller to finalize the communications plan.

Keeping in mind that our goal was to extract a multiplexed group out of the Patriot shelters, we decided to use TD-1234 remote multiplex combiners (RMCs) and TD-1233 remote loop group multiplexers (RGLMs). These boxes are similar in appearance to the air defense interface (ADI) devices used to integrate ADA fire control circuits with mobile subscriber equipment (MSE). The RMC combines up to eight 16/32 kb/s circuits into a multiplexed group that travels over CX11230 cable. The RLGM can combine up to four 16/32 kb/s circuits into a multiplexed group (basically half of an RMC).

The plan was to place RMCs or RLGMs at each Patriot shelter, bring the Patriot circuits into it, then send the multiplexed circuits over CX 11230 cable directly into a GM port of the TRC-170 (Figure 6) or the fiberoptic cable terminal.

The RMC/RLGM is similar to the LGM in the TRC-170, thus we could install the HSDI card in the RMC/RLGM and expect the same results we attained in previous

tests. Since RMCs and RLGMs are digital pieces of equipment, we could also use them to obtain switched phone service from the TTC-39 switchboard in Site #2 using KY-68 digital secure voice telephones (DSVTs).

A base cable system at each site allowed us, in some cases, to bring the DSVTs to the users without using the Patriot communications systems. Whenever the base cable system could not reach out to the subscribers, we sent the phone circuits over the internal UHF systems at each site, using HYP-71 power supplies to power each phone. Battalion connectivity with higher control elements would consist of hard-wiring the ICC with an air force modular control element (MCE) conveniently located within a short distance in the same secure area. Figure 7 shows the planned network connectivity.

Results

Once the communicators became familiar with the setup and gained knowledge in operating and troubleshooting the new interfaces, the network proved very reliable. The result was reliable PADIL data, clear party lines and secure digital voice switching. Patriot communicators monitored the status of the external transmission systems by looking at the state of the RLRIU ports in the communications link fault data tab displayed on the scopes of the ICC and ECS. We installed the MPLs the same way we did when using MSE, using designated DSVTs in a preprogrammed conference. The network design freed two CRGs that could then be deployed to surveyed backup sites in the event of system outages. The bottom line: the ICC assumed command and control of all six firing batteries two days prior to the commander in chief's deadline.

Lessons Learned

None of the circuits popped in as if by magic. As with any new concept, we suffered many initial growing pains and profited from lessons learned. Here are some of them.

Operation and troubleshooting of the RMC/RLGM: "Appalled" might describe the first reaction of the Patriot communicators when we placed these funny-looking green boxes in their shelters -- especially after we made them sign for the very expensive HSDI card. Taking the time to explain to them the overall network and what we were trying to do eliminated some of their initial fears. The fact is that Patriot communicators, unlike TRC-170 operators, do not normally get the chance to interface with joint tactical communication (TRI-TAC) equipment, thus they are unfamiliar with its use and operation. As a result, we initially experienced several outages when the transmission system was operational but nobody was taking responsibility to troubleshoot the RMC/RLGM.

Finally, we all agreed that the TRC-170 operators (with assistance from the Patriot communicator) would be responsible for connectivity down to the box. As Patriot communicators become more familiar with the RMC/RLGM, there will be less need for the Tropo operators to leave their shelter.

PADIL input into Patriot shelters: PADIL circuits transmitted over Tropo or fiberoptic cable could not be installed directly into the SEP of the Patriot shelters because of the bandwidth limitations covered earlier. To correct this limitation, units need the filters tested during the second PADIL/TRC-170 test. Patriot communicators installed the PADIL circuit using the spliced patch cord solution used in the first PADIL/TRC-170 test. This solution, although effective, violates shelter integrity and leaves the equipment susceptible to lightning, electromagnetic pulses and grounding fault problems. Raytheon is modifying the Patriot shelters with the proper filter units.

Auxiliary telephone equipment at the BTOC/ICC site: Because of the large number of circuits coming from external sources into the ICC/BTOC location, we ended up with a total of five different J-1077 signal distribution panels (J-boxes) and one RMC. Add the several strands of WF-16 wire that come out of these, and you get a pretty messy and confusing scene. Future plans call for a J-2317 signal distribution panel to replace three of the J-1077s. The J-2317 has four times the capability of the J-1077 and thus can terminate up to four different systems.

Thanks

Behind every success story, there are always key players whose contributions are essential to the overall mission accomplishment. On behalf of the entire 11th ADA Brigade, a special thanks to the many key players in this unique story of innovation. Finally, a most special thanks to the Patriot communicators from 2-7 ADA who quickly made the adjustments necessary to ensure mission accomplishment.

MAJ Soto has served as the Signal Officer for the 11th ADA Brigade, Fort Bliss, Texas, for one-and-a-half years. Earlier, he was the S-1 and S-4 of the 11th Air Defense Signal Battalion, Darmstadt, Germany. He holds a BA in Education from the Inter-American University of Puerto Rico and a MA in Education from the University of Central Florida. His military education includes the Signal Officer Basic and Advanced Courses and the Combined Arms and Services Staff School.