The AN/PSC-2: modern data

. . . the AN/PSC-2 equipped radio net can do what tactical communicators have considered impossible for many years: operate more than one net on a single tactical frequency.

by Lt. Col. David M. Fiedler

Most of the tactical communications systems used to support corps and division echelons today use single channel FM voice and low speed HF-SSB radio teletype nets. Because these systems require a relatively long time to transmit the amount of information needed by deployed units, the transmitting stations can easily be located by means of radio direction finding (RDF). Furthermore, these vital nets are susceptible to conventional jamming techniques due to the modulation and data techniques they employ. Even under non-stressed conditions, use of the present pencil and paper techniques causes unacceptable errors and delays in the transmission and processing of vital data, thus degrading the reliability of information, reducing its credibility to the commander, and restricting the ability of U.S. forces to quickly react to changing situations.

So what's the answer? Well, one promising possibility is a variable data-rate error-correcting digital device, which would increase the battlefield effectiveness of our present assets by ensuring that manual/voice communications users are directly integrated into the high speed processing capabilities of future tactical command and control systems. Such a device is currently being introduced into the U.S. Army Intelligence mission area. It consists of a digital communications terminal (DCT) developed by the Marine Corps and applications software developed by a contractor in conjunction with Army field units. They are now being introduced into MI battalions. If the system proves successful, it could evolve into a full-up JINTACCS based software set that could be integrated into the entire Army's communications systems.

Applications software

Applications software for battle management functions—such as maneuver control, fire support, and military intelligence—are commercially available "off-the-shelf" for interim use. Efforts are currently underway to provide government owned and supported software tailored for specific Army applications.

The applications support software provides services to the applications programs and the system users. It performs tasks related to the transmission of digital messages, implements the operator/machine interfaces, and provides a common system file access and maintenance capability. Figure 1 shows the major segments of the software currently being fielded and the functions provided within each segment.

The core of any automated command, control, and communications intelligence (C3I) system, the applications software provides the operator with the automated information processing software includes all of the standard report types needed by a typical MI battalion as well as several new ones. In addition to the intelligence reports, the applications software is able to pass operations reports or admin/log reports and the seven STANAG standard NBC reports, as well as FREE TEXT. The software has also proved interoperable with Field Artillery (TACFIRE format).

AN/PSC-2 hardware

The AN/PSC-2 is a lightweight, hand-held communications message processor providing the user with point-to-point communications over a variety of military radios and secure equipment. It has a LED display and key entry for the composition and readout of messages. It also provides

user prompting to aid in the composition of messages. Its capability to compose, edit, display, and process messages is provided by a stored program and a microprocessor. To augment and speed the composition of messages, a map display can be provided to assist in position entry of data. Though the AN/PSC-2 is small—it weighs less than 5 pounds, and is 8.8 inches long, 6.9 inches wide, and 1.6 inches deep—it has a full alphanumeric display, plus graphics (288 characters, 5 by 7 dot matrix, 7/32-inch high). It also has infinitely variable touch-panel switches that enhance operational capabilities and extend applications; 128K bytes of memory; and two-way communications, text, graphics, and message storage. It interfaces with most standard military radios and secure equipment and facilitates transfer of information between echelons, providing rapid, accurate information. Designed and environmentally tested to military specifications, it has a brightness control that enhances operation under all outdoor light conditions (bright sunlight to night operations). Figure 2 shows the block diagram of the DCT functional configuration.

The AN/PSC-2 can receive and transmit multiple messages over tactical nets and has the capacity for operator alerting and automatic storage of specified messages. These messages can be in fixed or variable format. The message processor performs all tasks of format composition, address coding, error control, and error checking, as well as net protocol. The operator can specify message data rate, address of receiving unit, and communication media modes/parameters.

The AN/PSC-2 provides interaction with the operator by means of the LED display, which has a transparent, overlayed, 54-position

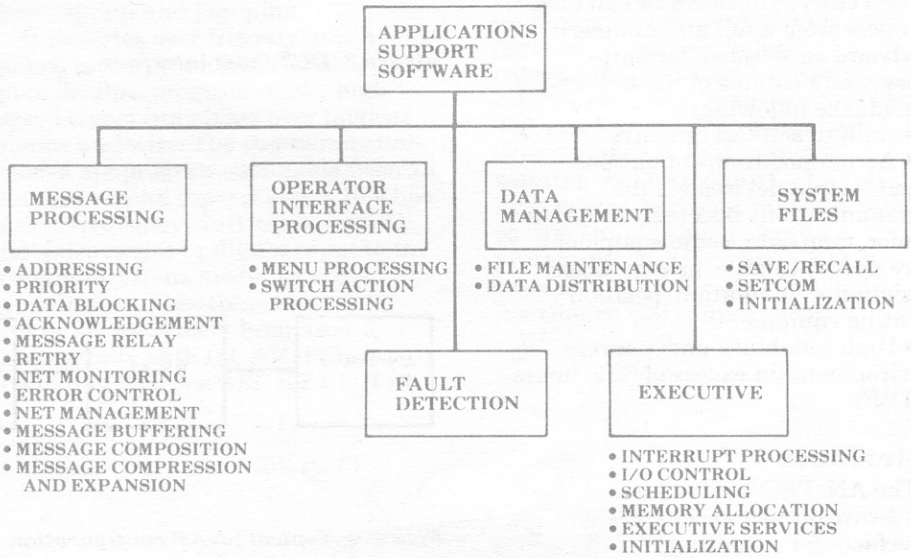

Figure 1. Applications support software modules and functions

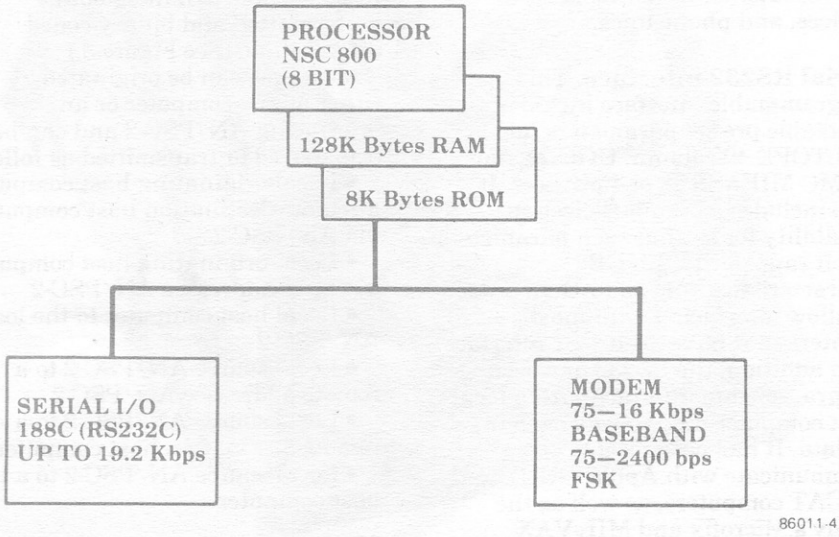

Figure 2. DCT functional configuration

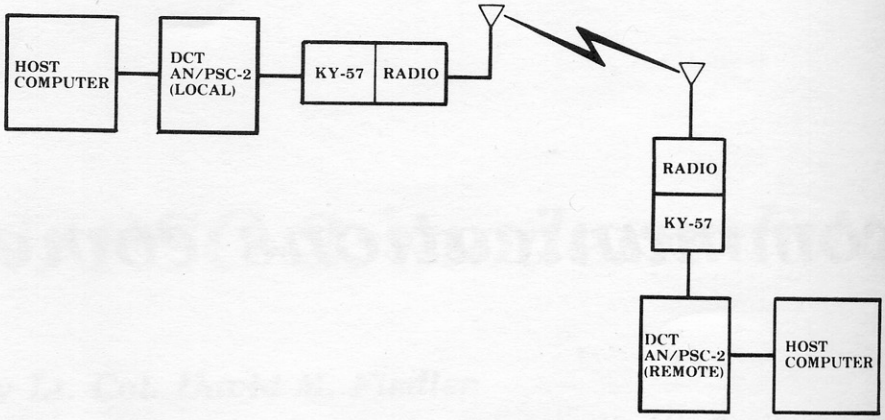

Figure 3. DCT/host interface

switch entry. The operator can also compose from a full alphanumeric keyboard on selected/formatted messages. Features of the AN/PSC-2 include the following:

- Built-in self-test circuitry
- Accommodations of various input/output devices via the communications port (e.g., program loader, map data, radio equipment wire nets, facsimile, printer, laser designator, navigation/position locating equipment)
- High reliability under severe environment (in excess of 6250 hours MTBF)

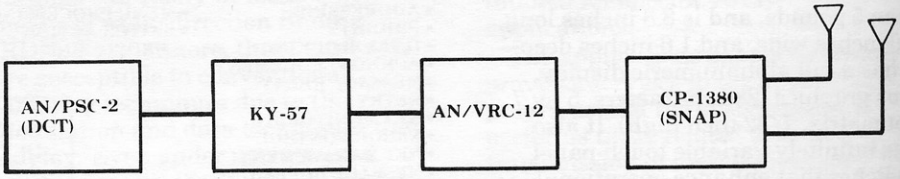

Figure 4. Typical SNAP configuration

Interfaces

The AN/PSC-2 software and hardware provide serial (RS232) interfaces for outputting data to a printer and for two-way interface with any other computer that has appropriate two-way RS232 software. In addition, fully programmable modem interfaces are provided to communicate through a wide range of radios, satellite terminals, crypto devices, and phone lines.

Serial RS232 interface. This programmable interface includes selectable pre-set parameters for MILTOPE 40-column, UGC-74, and USMC MIFASS Type I printers. It also includes a manual selection capability for setting such parameters as bit rate, parity, LF-CR characteristics, and so forth in order to allow interfacing with most printers that have an RS232 interface.

In addition, the RS232 has been programmed to interface with a local host computer for two-way exchange of data. It has been used to communicate with Apple, GRID, and WICAT computers, as well as the Army's Microfix and MIL-VAX computers.

The RS232 interface provides two-way serial interchange of data between the host computer(s) and the AN/PSC-2. It also enables the AN/PSC-2 to forward messages using a communications protocol. The RS232 is able to handle both preformatted and binary-coded information. (See Figure 3.)

Messages can be originated at either a host computer or an interfacing AN/PSC-2 and can be transferred or transmitted as follows:

- Local-originating host computer to a remote-destination host computer via AN/PSC-2
- Local-originating host computer to a remote-addressee AN/PSC-2
- Local host computer to the local AN/PSC-2
- Local-source AN/PSC-2 to a remote-addressee AN/PSC-2
- Local-source AN/PSC-2 to a remote-destination host computer
- Local-source AN/PSC-2 to a local host computer

Modem interface. Because of its modem interface capabilities, the AN/PSC-2 can accomplish the following functions:

- Message composition
- Addressing
- Communications and COMSEC keying
- Bit and character framing/synchronization
- Transmission rates and frequencies (tone pairs) for FSK, and clocking for digital transmissions
- Signal level adjustments
- Network protocol requirements, including digital net activity sensing, net access delays and access priorities, error control (EDC, TDC, retransmissions, and byte merge/correction), acknowledgement wait times, loss of signal, and loss of message detection.

Operating modes

There are a number of preset modes for normal operations, plus a MANUAL mode for unusual circumstances. These modes set the

data rate, the time delays required for radio and crypto equipment, the key time, etc. The MANUAL mode allows the operator to select all communication parameters for unusual or nonstandard operation.

Error detection and correction/time division coding

All modes use 4/8 hamming code EDC (error detection and correction, also known as FEC or forward error correction) and module-16 TDC (time division coding) for immunity to net noise and enemy countermeasures. The EDC provides 4 bits of hamming code for each 4 bits (1/2 byte) of data, which allows detection of double-bit errors and correction of single-bit errors at the receiving end. The TDC provides enhanced immunity to random noise spikes by distributing each type of data in segments throughout the message. In addition, the message is automatically transmitted up to three times when an acknowledge (ACK) message is not received in a predefined time. In conjunction with byte merge at the receiving end, this has proven extremely effective in assuring that the message gets through, even in a noisy or enemy ECM environment.

Communications terminal message preamble

The communications terminal message preamble consists of a key time for the purpose of overcoming delays experienced by the communications equipment and the receiving communications terminal synchronization pattern (bit and byte sync). The preamble varies, depending upon operating mode/equipment characteristics.

ECCM/LPI-LPD/LPE - system structure

When coupled with modern encryption equipment (such as the

Characteristics and capabilities

A lightweight digital communications terminal, the AN/PSC-2 provides the user with point-to-point communications over a variety of tactical radio and wire systems. Using preformatted messages with burst transmissions and error correction techniques, the AN/PSC-2 is able to reduce on the air time, improve operational efficiency, and reduce vulnerability to interception and jamming.

It provides user-friendly, touch-panel, menu-prompting data input, plus flexible, programmable, high-speed communications over tactical radios and wire. The communication modes are program-selectable from 75 bits per second (bps) through 16 Kbps, using frequency shift keying (FSK) for voice radios or digital input to the communications media as appropriate. Numerous net configurations have been used successfully with the AN/PSC-2, including 16 Kbps with KY-57 encryption over RT-524 and PRC-77 radios; 1200 bps FSK over RT-524 radios; 600 bps FSK through AN/GRA-39 remote units, KY-57 encryption, and RT-524 radios; and 16 Kbps with KY-57 encryption and FSK over URC-101 satellite terminals through a Navy satellite. The AN/PSC-2 has also been used with the PRC-117, multi-channel, and military and commercial phone lines. Clearly, reliable tactical digital communications are possible with the AN/PSC-2. In fact, it can virtually replace voice communications with high-speed, secure, digital communications that have proven reliable even in a hostile environment. The touch-panel, menu-prompting program means that minimal training will be required. The lightweight, portable, and survivable equipment also has powerful processing, memory, and display capabilities for the evaluation of distributed C3I information.

The AN/PSC-2 digital communications terminal

KY-57) and modern ECCM equipment (such as the CP-1380/VRC Steerable Null Antenna Processor — SNAP), the AN/PSC-2, with its short transmission time, will vastly reduce the probability of the user being detected or intercepted.

An enemy attempting to jam this system also faces a formidable task. The SNAP will immediately attenuate any jamming signal to a fraction of its original strength. If any usable portion of this signal remains, the error correction, automatic retransmission, and byte merge features of the AN/PSC-2 all will work to defeat the jamming. Field testing has shown a high degree of success when using systems such as the one shown in Figure 4 against all known types of jamming.

Spectrum management

Actual field test data gathered when AN/PSC-2 equipment is used on existing VHF voice nets have shown conclusively that voice traffic will drop by as much as 95% on tactical radio nets. This in itself will allow larger radio nets and the merging of several nets, thus conserving the radio spectrum. It has also been shown that the AN/PSC-2 equipped radio net can do what tactical communicators have considered impossible for many years: operate more than one net on a single tactical frequency. Field units have successfully operated two data and one voice net on a single frequency, using the crypto key and the unique data addresses in the AN/PSC-2 software to separate the nets.

Each item in the AN/PSC-2 system is approved for service use and logistically supportable. With the system configured as shown in Figure 4, the system performance in a stressed environment will compare favorably with frequency hopping radio systems using sophisticated ECCM techniques; these systems, still being designed, are considerably more complicated, expensive, and prone to equipment failure. The Army should seriously consider a performance comparison of the AN/PSC-2 system and standard or NVI radios versus these other approaches, since the difference in performance will probably not justify the projected costs of the systems being developed. A field test would be inexpensive and extremely valuable.

The AN/PSC-2 hand-held terminal represents the latest in production technology in advanced C3 terminal equipment. The terminals are light enough to carry and are able to control and coordinate tactical operations within large tactical units. The C3 systems employing these terminals vastly enhance control and coordination while adding very little to the equipment load of the unit.

Today's mobile forces need a great amount of information to fight. And they need it fast. The AN/PSC-2 terminal answers these needs using fully supportable radio and crypto equipment already deployed to our forces. Lightweight, battery-powered, and programmable, it delivers immediate man-portable command, control, and communications capabilities.

The design of the AN/PSC-2 makes use of many new mechanical and electrical packaging techniques evolved after several years of study, experimentation, and analysis. The AN/PSC-2, procured by the U.S. Marine Corps for all the military services, has successfully completed government design and environmental verification tests, reliability and maintainability demonstration tests, and electromagnetic interference and TEMPEST tests prior to production. The terminal transmits data digitally and displays it graphically or alphanumerically. The crucial lag from input to understanding at all echelons shrinks to a matter of seconds, since garbled verbal messages are virtually eliminated.

The AN/PSC-2 provides the speed, flexibility, and intelligence needed to master any tactical situation, while simultaneously reducing both the ECCM and frequency assignment problems that have plagued tactical communications for decades.

Lt. Col. Fiedler was commissioned in the Signal Corps upon graduation from the Pennsylvania Military College in 1968. He is a graduate of the Signal Officers Basic Course, the Radio and Microwave Systems Engineering Course, the Signal Officers Advanced Course, and the Command and General Staff College. He has served in Regular Army and National Guard Signal, infantry, and armor units in CONUS and Vietnam. He holds degrees in physics and engineering and an advanced degree in industrial management.

Lt. Col. Fiedler is presently employed as the chief of the Fort Monmouth Field Office of the Joint Tactical Fusion Program (JTFP) and as assistant project manager (APM) for Intelligence Digital Message Terminals (IDMT). He is also chief of the C-E Division of the NJ State Area Command (STARC), NJARNG. Prior to coming to the JTFP, Lt. Col. Fiedler served as an engineer with the Army Avionics, EW, and CSTA Laboratories, the Communications System Agency (CSA), the PM-MSE, and the PM-SINCGARS. The author of several articles in the fields of tactical communications and electronic warfare, he has served as a consultant to the Army Study Advisory Group (SAG) for theater communications and as a member of the Mobile Subscriber Equipment (MSE) Evaluation Board.