Protecting against electromagnetic pulses

by Lt. Col. David M. Fiedler

While some of...(our current) "protective measures" are better than nothing, they do not really offer much protection to equipment that must continue to operate under the threat of nuclear attack.

Ever since the invention of nuclear weapons and solid state electronic components, we in the Army and particularly the Signal Corps have been warned repeatedly about the effects of nuclear weapon generated electromagnetic pulses (EMPs) on our radio equipment.

Our current doctrine, as set down in FM 24-1, FM 24-18, and other Signal Center publications, does list the following "EMP protective measures":

- Keep all shelter doors, access panels, and vents closed and sealed.
- Be prepared to quickly repair and reintegrate damaged portions of a system.
- Disconnect all equipment not absolutely required and store it in a sealed shelter or other shielded enclosure.
- Unreel excess cables to avoid loops.
- Bury cables to a depth of at least one foot.
- Disconnect antennas.
- Do not use commercial power.

While some of these "protective measures" are better than nothing, they do not really offer much protection to equipment that must continue to operate under the threat of nuclear attack.

How does a person operate from a shelter with all doors, access panels, and vents closed and sealed?

How does a unit repair and reintegrate damaged portions of an operational system quickly when the damage is to components repaired and stocked at higher maintenance echelons and no spare equipment is authorized on the unit TOE?

How does a unit disconnect antennas from an operational system and continue to perform its mission?

Where does a unit get the manpower and equipment to bury cables to a depth of one foot?

How does a unit maintain its capability to deploy quickly if it is unreeling cable in order to avoid EMP damage?

If these measures are accepted as adequate, or at least as the best we can do, their most significant effect may be to blind us to an unnecessary operational and doctrinal deficiency. As I hope to show, much more effective—yet simple—protective measures against EMP damage do exist. The intelligent application of existing "off the shelf" technology along with proper training can solve the EMP problem if we in the Signal Corps want to do it.

In order to understand and solve the EMP problem, we first must know what EMP is. EMP is simply a high-amplitude, short-duration electromagnetic wave that is generated by an above-ground nuclear explosion. This wave typically has a 50-kilovolt-per-meter horizontal component and a 20-kilovolt-per-meter vertical component. As Figure 1 shows, the wave reaches peak amplitude in 5-10 nanoseconds. At these levels of potential voltages, unprotected solid state devices (transistors, diodes, integrated circuits, etc.) will break down and fail, thus disabling critical C3 systems. This effect can be so far-reaching that one moderately sized nuclear device (1-10 megatons) exploded at an altitude of between 250 and 300 miles will produce a sufficiently high level of EMP energy to destroy all unprotected equipment in an area the size of the continental United States. (Figure 2 illustrates the areas of EMP damage caused by a nuclear explosion at various heights above the center of the United States.)

EMP effects

EMP is the cause of several different effects which should be understood prior to applying protective measures.

Compton Effect: When a nuclear device is exploded, high energy photons (gamma rays) are generated. These gamma rays react with the gas molecules of the upper atmosphere to produce large electric charges and

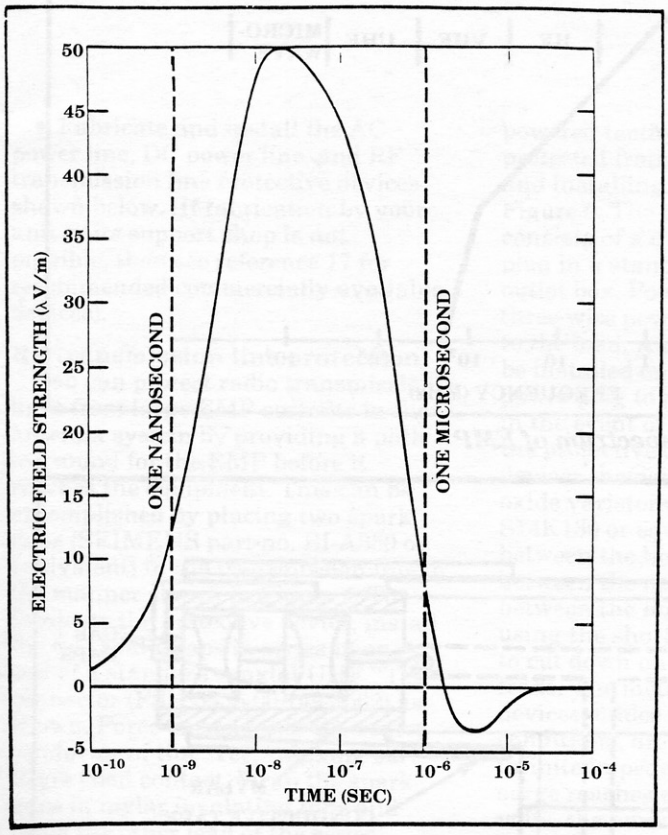

Figure 1. Electric field strength of a typical EMP wave

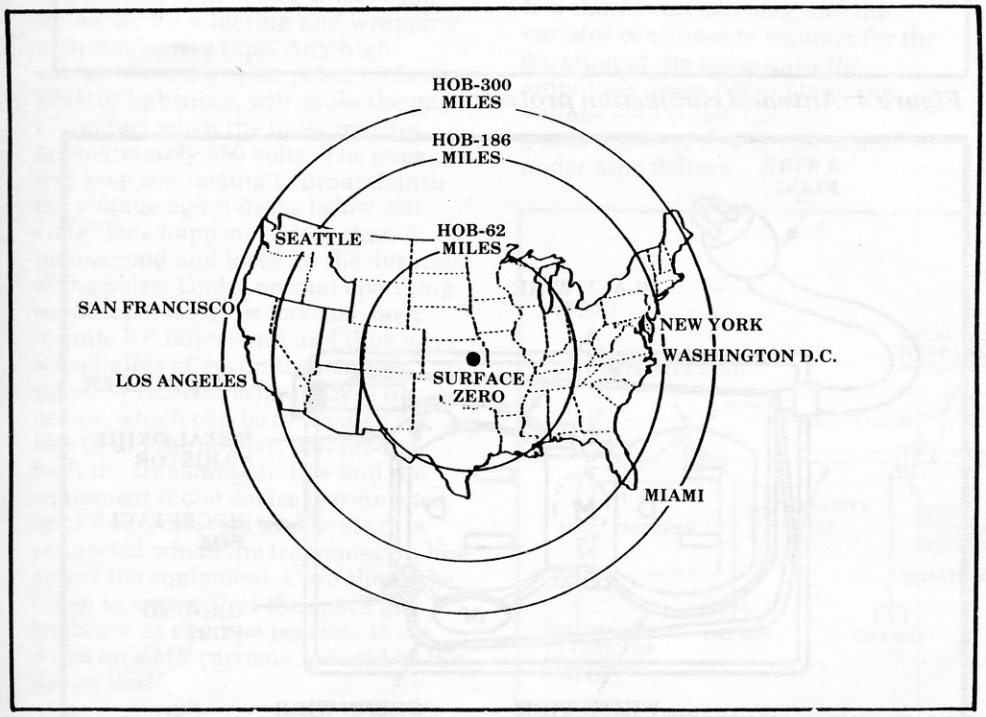

Figure 2. EMP ground coverage for high-altitude nuclear explosions at 62, 186, and 300 miles altitude (10-megaton)

currents, which are the sources of EMP. Here is how it happens: when the gamma rays strike an atom, it releases an electron, known as a Compton electron. When the Compton electron—carrying a negative charge—moves away from the atom, the atom is left with a positive charge. The resulting charge separation in the atmosphere creates a large electric current in what is known as the "deposition region." More electrical currents are created when the free (Compton) electrons pass through the earth's geomagnetic field. Approximately 1 microsecond after the burst, the Compton electrons are reabsorbed by the atmosphere. Since both the gamma rays and the Compton electrons are moving at the speed of light, the deposition region is formed quickly, resulting in a pulse of energy with a very fast rise time covering a wide frequency range. As Figure 3 shows, this energy is most intense in exactly the frequency range where much of our military radio communications occurs.

Coupling Effect: Conductors located below the deposition region will act as antennas for the EMP energy and have high electrical currents induced in them. Long power and telephone lines are very effective in picking up the low frequency component of the EMP, while short conductors such as antennas and the leads of electronic components are effective in picking up the high frequency component of EMP. The EMP energy on short conductors is in the form of a destructive high current and voltage surge which is transmitted to the attached equipment.

Equipment does not have to be directly connected to the conductor for damage to happen. Energy from the pulse can be coupled to the equipment from another conductor via electric or magnetic induction or by direct coupling.

Effect on signals: Though the effect of nuclear weapons radio signals is not the subject of this paper, it is important to note that signal degradation in the form of high noise levels, absorption, attenuation, and ionization blackout will result from detonations in the atmosphere.

In the typical communications system, EMP would be collected primarily by antennas, as well as by transmission lines, power and control lines, etc. Damage would occur where the lines enter the equipment, such as at the antenna tuner, power supply, or RWI interface. Once the EMP energy enters the equipment, it may burn out integrated circuits, destroy other solid state junctions, or change the electrical properties of certain components, thus degrading equipment performance. EMP may also cause solid state devices to change their condition, requiring resetting, or cause such things as "memory dumps," which require reloading of system software.

Countering the EMP threat

The protective measures shown in FM 24-1 and FM 24-18 which are practical to implement (such as using generator instead of commercial power, burying short lengths of cable, disconnecting antennas from non-operational equipment, sealing unused shelters, etc.) should be implemented, depending on the individual commander's situation. In addition to those shown, however, the following practical measures should also be implemented:

- Tie all equipment (including shelters and power generators) to a SINGLE POINT earth ground in order to prevent closed circuit loops through the ground. The present methods of grounding separate pieces of equipment to their own ground rods must be discontinued. When two ground rods are required by safety regulations, they must be tied together through either the existing wiring (as in most standard shelter/generator configurations) or by adding a separate cable between ground rods.
- Use non-metalic guy lines and antenna supports to prevent damage from coupling.

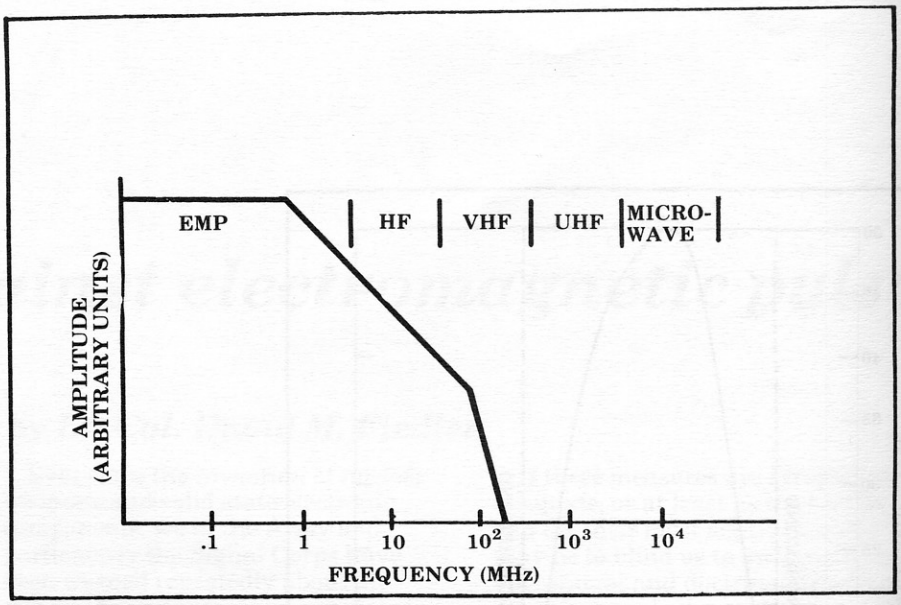

Figure 3. Frequency spectrum of EMP

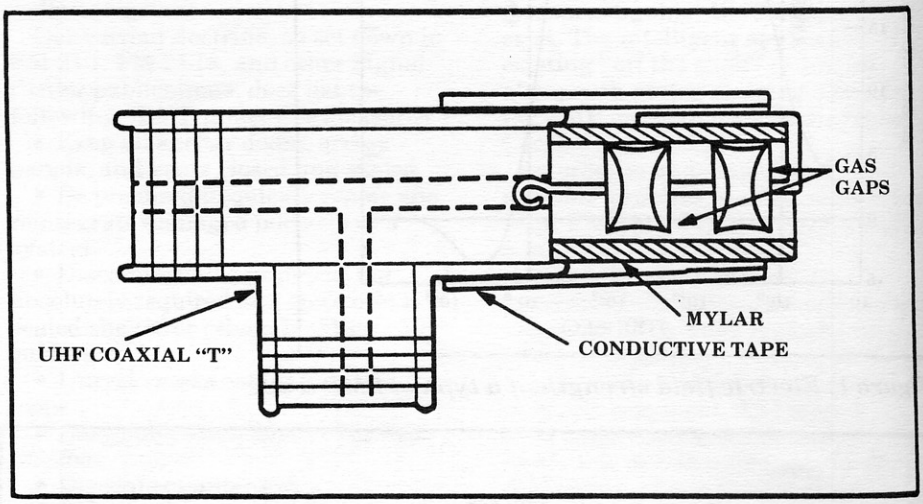

Figure 4. Antenna connection protector

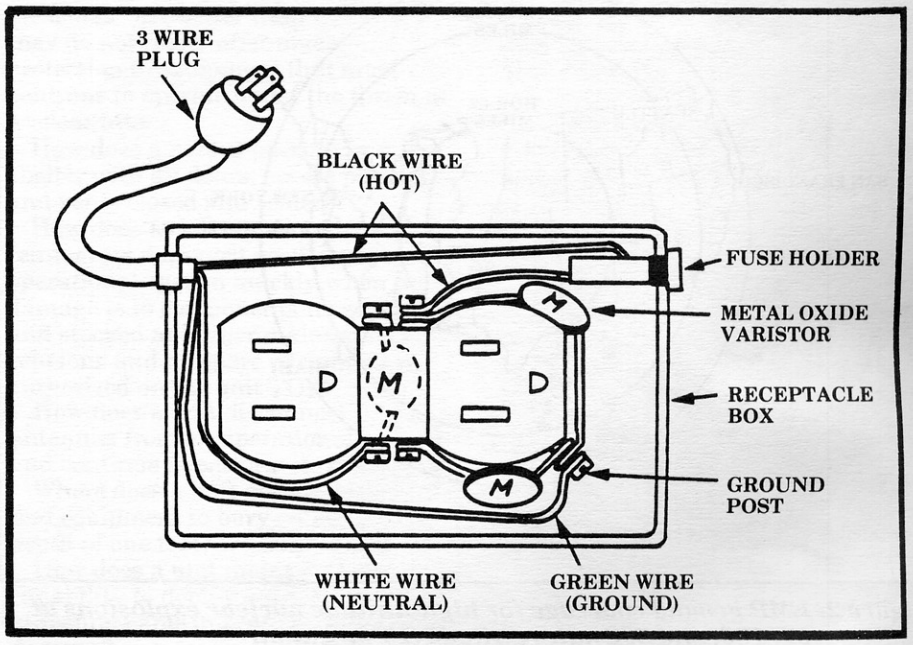

Figure 5. AC power protector

• Fabricate and install the AC power line, DC power line, and RF transmission line protective devices shown below. (If fabrication by your unit or its support shop is not possible, then see reference 17 for recommended commercially available devices).

RF transmission line protection

You can protect radio transmission lines from large EMP currents in the antenna system by providing a path to ground for the EMP before it reaches the equipment. This can be accomplished by placing two spark gaps (SEIMENS part no. BI-A350 or equivalent) in the transmission line in the manner shown in Figure 4. To fabricate the protective device, install the two spark gaps in series in one end of a standard coaxial UHF "Tee" connector (FSN 5935-00-149-3562) as shown. Force one end into the center conductor of the "Tee," making sure to get good contact. Wrap the spark gaps in mylar insulating tape and bring the other lead of the series connected spark gaps over the mylar and ground to the outer shell of the connector by soldering and wrapping with conductive tape. Any high energy short duration pulse, including EMP or lightning, will cause the gaps to conduct when the pulse reaches approximately 350 volts. The gaps will keep conducting to ground until the voltage again drops below 350 volts. This happens in less than a nanosecond and lasts for the duration of the pulse. Under normal operating conditions, the gaps have a nearly infinite RF impedance and thus have a negligible effect on transmitter power or receiver sensitivity. This device, which can be fabricated for less than nine dollars, will protect both the transmission line and the equipment if one device is connected on the antenna end and another is connected where the transmission line enters the equipment. Care should be taken to assure that the spark gap leads are as short as possible to cut down on EMP currents induced in the device itself.

AC power line protection

Equipment operating from commercial power or generator powered tactical equipment can be protected from EMP by fabricating and installing the device shown in Figure 5. The protective device consists of a duplex female power plug in a standard metal electrical outlet box. Power is supplied via a three-wire power cable sized according to the load. A properly sized fuse can be installed on the "hot" side of the power plug to protect the equipment in the event of a short circuit in one of the protective devices. The protective devices themselves are three metal-oxide varistors (SEIMENS part no. S14K130 or equivalent) installed between the hot line and ground, between the neutral and ground, and between the hot line and neutral using the shortest possible lead length to cut down on EMP induced in the leads. The metal oxide varistor devices, under normal operating conditions, are open circuits with infinite impedance. When a voltage surge reaches approximately 340 volts, the varistor will conduct (clamp), taking the pulse to ground and not the equipment. This occurs in less than a nanosecond, and the varistor continues to conduct for the duration of the pulse until the amplitude drops below clamping voltage (340 volts). Cost for construction of this device is also under nine dollars.

Protecting equipment installed in vehicles

To protect this radio equipment, the transmission line and its connected circuitry should have two of the UHF "Tee" devices installed as shown in Figure 5. In addition to this, the radio equipment should be installed in a way that takes advantage of the protection provided by the vehicle's battery. The positive power lead should be connected directly to the battery, without going through fuse box or ignition-system connections, and the negative side must be connected directly to chassis ground. Though in most vehicles with tactically installed communications equipment, these connections have already been made, in vehicles with commercially installed equipment (such as MP cars, staff cars, etc.) they have not. Also, in-line fuses should be placed in both the positive and negative power lines in order to protect the equipment from electrical overload.

In addition to these measures, a metal oxide varistor similar to the one used for AC power line protection described above (General Electric part no. GE-MOV-V36ZA80 or equivalent) should be installed between the positive and negative lines, and as close to the equipment as possible. (See Figure 6.) This device will

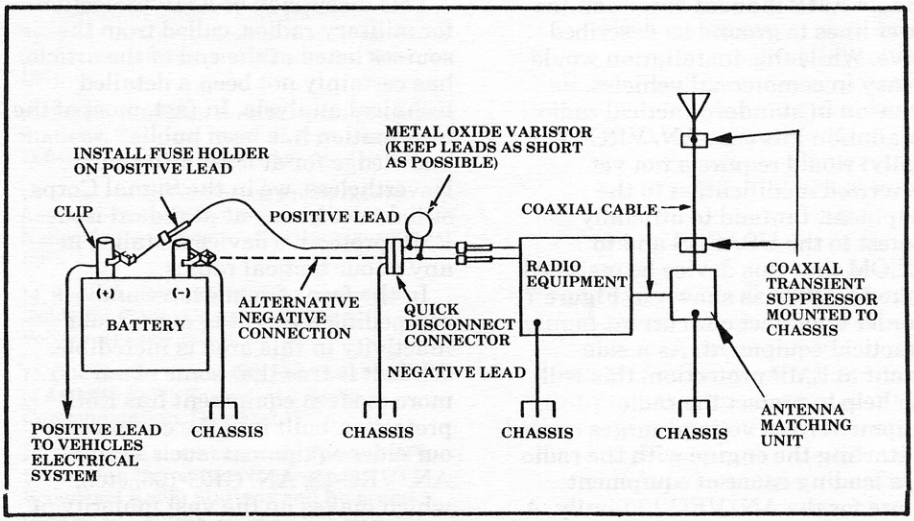

Figure 6. Recommended method of connecting mobile radio equipment to battery and antenna

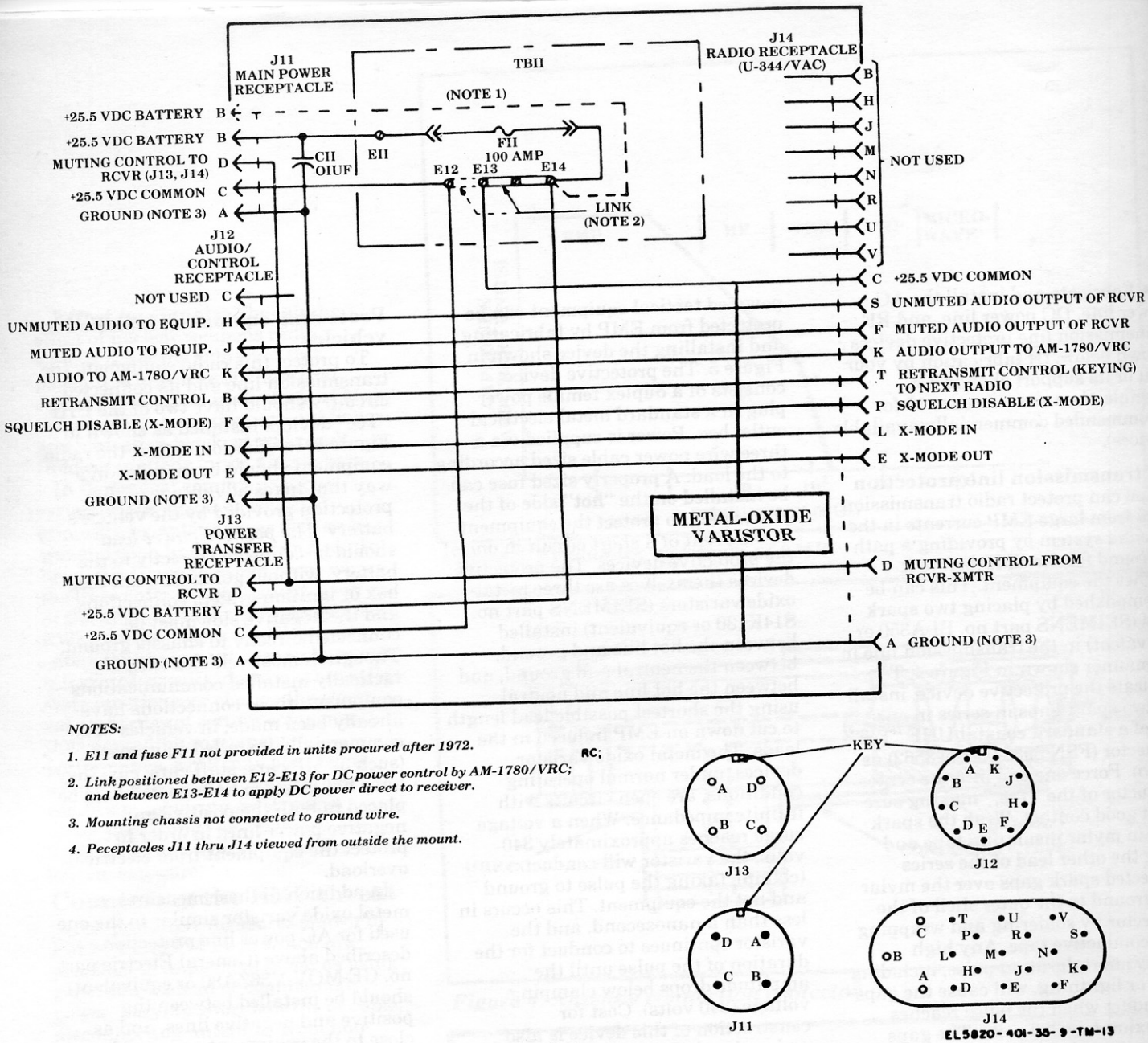

NOTES:

1. *E11 and fuse F11 not provided in units procured after 1972.*
2. *Link positioned between E12-E13 for DC power control by AM-1780/VRC; and between E13-E14 to apply DC power direct to receiver.*
3. *Mounting chassis not connected to ground wire.*
4. *Peceptacles J11 thru J14 viewed from outside the mount.*

Figure 7. Mounting MT-1898/VRC, schematic diagram

conduct EMP induced surges on the power lines to ground as described above. While this installation would be easy in commercial vehicles, its inclusion in standard tactical radio installation kits (i.e., AN/VRC-12 family) would require a not yet authorized modification to the equipment. I intend to officially suggest to the USASCS and to CECOM that this device be installed in the MT-1029 as shown in Figure 7 in order to protect our current family of tactical equipment. As a side benefit to EMP protection, this will also help to protect the radio equipment from voltage surges caused by starting the engine with the radio on, a leading cause of equipment failure for the AN/VRC-12 family. A metal oxide varistor can be installed for less than $1.50.

This discussion of EMP protection for military radios, culled from the sources listed at the end of the article, has certainly not been a detailed technical analysis. In fact, most of the information has been public knowledge for at least 6-10 years. Nevertheless, we in the Signal Corps still do not have one standard-issue EMP protective device installed in any of our tactical radios.

In the face of so massive and compelling a threat to our C3, our inactivity in this area is incredible. While it is true that some of our more modern equipment has EMP protection built into the equipment, our older equipment (such as the AN/VRC-12, AN/GRC-106, etc.), which makes up the vast majority of our present inventory, does not. I know of no case where transmission lines are protected. Since this equipment will be with us well into the next century, as will the ever increasing amount of commercial NDI radio equipment coming into the Army, we must take steps to protect it. I would suggest the following:

- Implement the protective measures suggested above—or similar ones—as quickly as possible.
- Train communicators to be aware of EMP and methods for its neutralization.
- Establish clear requirements for the EMP protection of all future equipment. NDI equipment without built-in EMP protection must be provided external protection similar to the devices shown as a matter of command policy.

When these steps are taken, comba commanders who depend upon the

Signal Corps to get the message through can be confident of good C3, even on the nuclear battlefield.

Mr. Fiedler has served in Regular Army and National Guard Signal, Infantry, and Armor units in CONUS and Vietnam. He has been operations officer, "B" Co., 44th Signal Battalion; communications-electronics staff officer, 1st Battalion, 113th Infantry (Mechanized); assistant G-3 50th AD; and ADCEO 50th AD. Mr. Fiedler, who holds degrees in physics and engineering and an advanced degree in industrial management, is presently chief of the Fort Monmouth Field Office of the Joint Tactical Fusion Program and assistant project manager for Intelligence Digital Message Terminals. He is also chief of the C-E Division of the NJ State Area Command, NJARNG. Prior to coming to the JTFP, Mr. (Lt.Col.) Fiedler served as an engineer with the US Army Avionics, EW, and CSTA laboratories, the Communications Systems Agency, the PM-MSE, and the PM-SINCGARS. He is the author of several articles in the fields of tactical communications and electronics warfare.

REFERENCES

1. Samuel Glasstone and Philip J. Dolan, **The Effects of Nuclear Weapons,** Washington, D.C.: Government Printing Office, 1977.

2. Eric J. Lemer, "Electromagnetic Pulses: Potential Crippler," **IEEE Spectrum,** May 1981.

3. C.R. Fisher, D.B. Nelson, "EMP and the Radio Amateur," **QST,** September 1975.

4. E. Walter Terrie, Ph.D., **Amateur Radio in the United States and Canada,** 1980, prepared by Institute for Social Research, Florida Sate University, September 1980.

5. **The American Radio Relay League Operating Manual,** published by the American Radio Relay League, Newington, Connecticut, 1980.

6. Richard K. Palm, **The FCC Rule Book, a Guide to the FCC Regulations,** published by the American Radio Relay League, Newington, Connecticut, 1984.

7. **Public Service Communications Manual,** published by the American Radio Relay League, Newington, Connecticut.

8. **DNA EMP Course Study Guide,** BDM/W-82-305-TR, prepared for the Defense Nuclear Agency, January 1983.

9. **EMP Threat and Protective Measures,** Technical Report, TR-61, Federal Emergency Management Agency, April 1980.

10. **The American Radio Relay League NET Directory,** 1984-1985 Edition.

11. Richard W. Sutton, "EMP Hardening for C3 Systems," AFCEA Course on Nuclear Effects on C3 Systems and Survivable Networks, November 1984.

12. **EMP Protection for AM Radio Broadcast Stations,** Technical Report 61C, prepared for the Defense Civil Preparedness Agency, July 1976.

13. Memorandum of Understanding between the American Radio Relay League, Inc., and the National Communications System, signed June 1983.

14. Roger R. Block, **Lightning Protection Guide for Radio Communications,** Polyphaser Corporation, 1985.

15. G.R. Jessop, "Lightning and EMP Protection of Amateur Radio Equipment," **Radio Communication,** December 1982.

16. **Nuclear Electromagnetic Pulse (EMP) Protection Manual for Emergency Broadcast Radio Stations and Emergency Operating Centers,** Draft Technical Report, Federal Emergency Management Agency, undated.

17. **Electromagnetic Pulse: Transient Threat Testing for Protection Devices for Amateur/Military Affiliate Radio System Equipment,** Technical Information Bulletin 85-10, National Communications System Volume I, October 1985.

18. **Combat Communications,** DA Field Manual 24-1, September 1985.

19. **Tactical Single Channel Radio Communications Techniques,** DA Field Manual 24-18, 13 December 1984.

20. **Depot Level Maintenance and Repair Manual for Radio Mount MT-1029/VRC and Radio Mount MT-1898/VRC,** DA Technical Manual 11-5820-401-35/9.