MSE organization and structure

by George W. Evans

The MSE area system will provide the Army with a new and vastly decentralized means of tactical communications. No longer will you see extensive radioteletype nets and communications centers within corps and division areas. Terminal equipment, telephones, and facsimile will become user installed and operated.

The basic building block of the MSE system will be the nodal platoon (Figure 1), which will consist of a platoon headquarters, a node central section, and an extension switch section.

The platoon headquarters will contain a management shelter from which the nodal commander will exercise command and control. The node central section, which will provide the "hub" of the communications, will contain the node center switch (NCS), a radio access unit (RAU), four line-of-sight (LOS) radios (V3), and a net radio interface (NRI) for combat net radio (CNR) users to enter the MSE systems. The extension switch section, which will deploy away from the node and provide the area coverage for subscribers, will consist of three small extension switches (SESs) (V1), one SES (V2), one RAU, and five LOS radios (V1).

There will be three main MOSs assigned to the nodal platoons: 31W personnel will serve as section supervisors; 31D personnel will operate the LOS and RAU equipment; and 31F personnel will operate the node central and extension switches.

These nodal platoons will perform the operational mission of the area Signal company (Figure 2), which will be standard throughout the division and corps. The area Signal company will consist of a company headquarters and two nodal platoons. The company headquarters will be structured along conventional lines and perform the supply function and

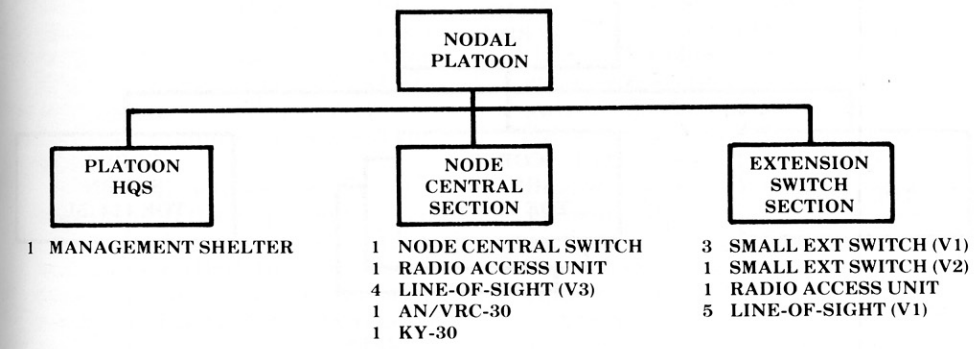

Figure 1.

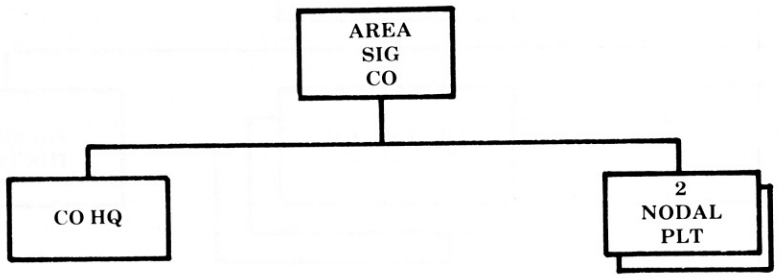

Figure 2.

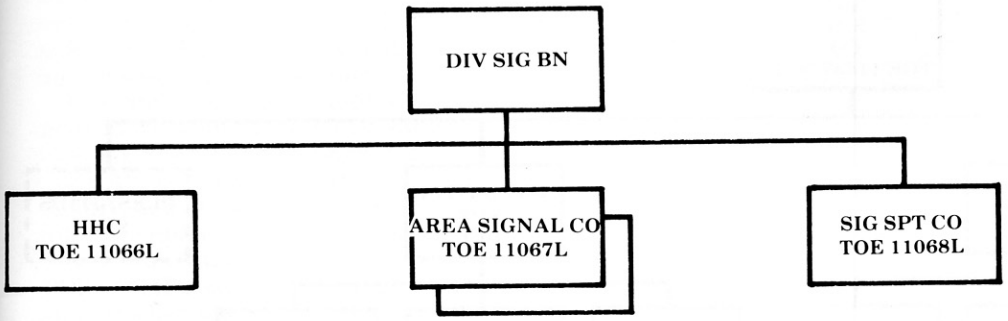

Figure 3.

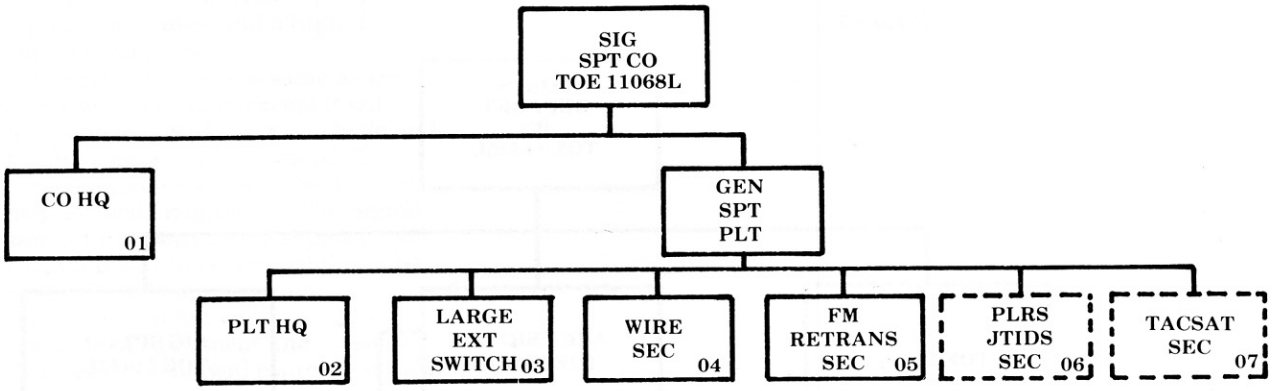

Figure 4.

unit level maintenance for wheeled vehicles and generators. Cooks with two field kitchen trailers will provide mess support to the unit.

The division Signal battalion (Figure 3) will consist of a headquarters and headquarters company, two area Signal companies, and a Signal support company. Unlike the area companies, the Signal support companies in the division Signal battalion, the area Signal battalion, and the support battalion will all be different. By fulfilling the nonstandard communication requirements, the support companies will keep the area companies to a manageable size and allow them to be identical.

The division Signal support company (Figure 4) will have a company headquarters and a general support platoon. The company will support a major headquarters such as the division support command (DISCOM) and provide the FM retransmission to extend the division FM nets.

The company headquarters will have a refueling capability, though it will not have a field mess facility. It will rely on the battalion HHC for mess just as the general support platoon will depend on the supported unit.

The general support platoon will have a platoon headquarters, a large extension switch (LES) section, a wire section, and an FM retransmission section. The PLRS/JTDS and tactical satellite (TACSAT) sections will be implemented as incremental change packages (ICPs) when the equipment is fielded. Only selected divisions will receive TACSAT sections.

The LES section will contain an LES, a management shelter, an RAU, one LOS radio (V1), one LOS radio (V2), a NATO interface facility, and a cable facility.

The headquarters and headquarters company of the division Signal battalion will be essentially unchanged from today's, except for the systems control facility in the operations/intel section. The C-E maintenance section will have, in addition to the maintenance shelters it has today, two MSE maintenance shelters and three MSE spare shelters. Two of the spare shelters will support the area companies in a contact mode of operation. There will be three tank and pump units in the admin/LOG section to refuel the HHC and the two area companies.

Now that you are familiar with the structure of the MSE division, let's look at the corps Signal brigade (MSE) shown in Figure 5. It will consist of an HHC, three area Signal battalions, and a corps support battalion. The brigade HHC (MSE) will have about the same structure as today's Signal brigade HHC. Within the network control branch of the ops/intel section, there will be two system control facilities, which will contain the system control command center and the system control technical center that was found in the division Signal battalion. However, at

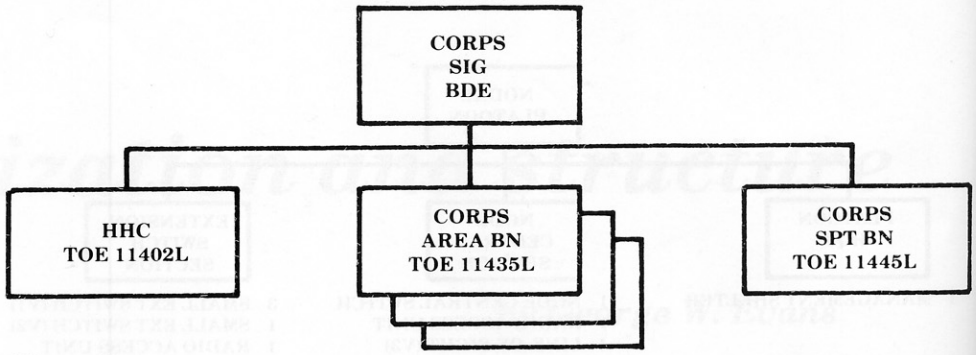

Figure 5.

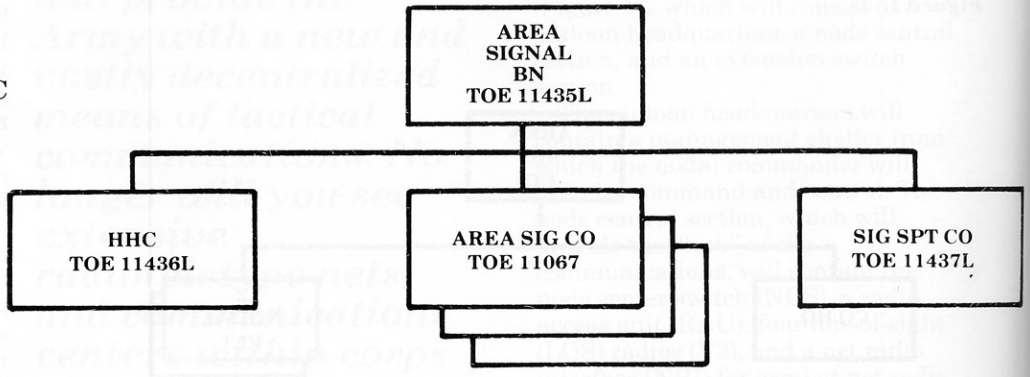

Figure 6.

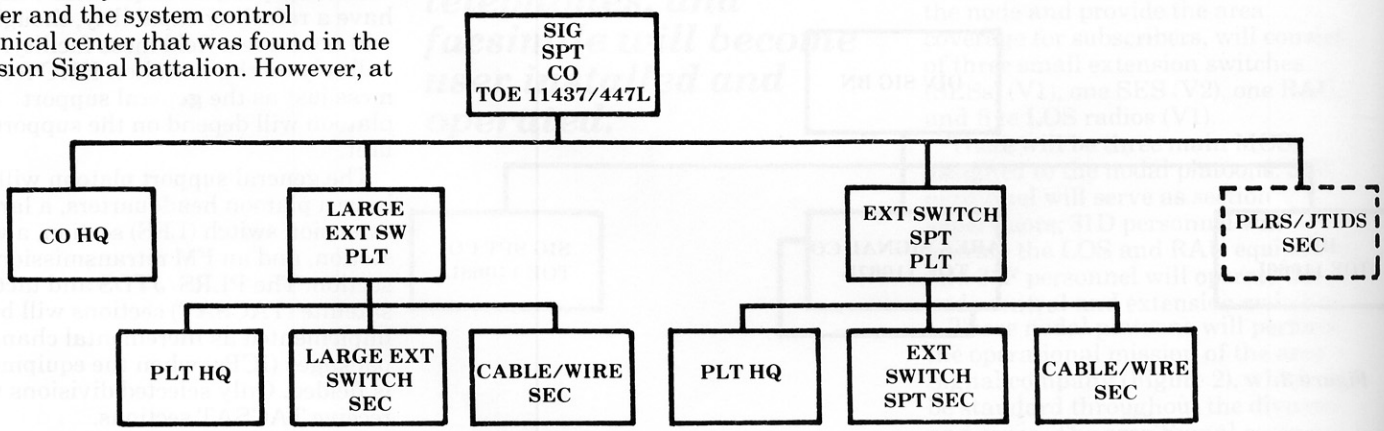

Figure 7.

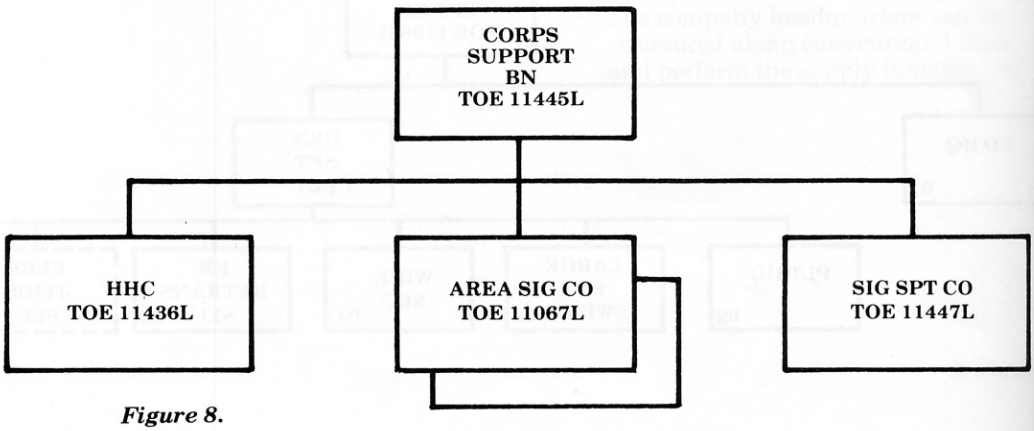

Figure 8.

corps there will be an additional assemblage, the system control planning center, contained in each facility. The company headquarters will have a support platoon, which will contain the multichannel TACSAT equipment to support the corps.

There will be three area Signal battalions in the corps Signal brigade (MSE). Each area battalion (Figure 6) will have an HHC, three area Signal companies, and a Signal support company. The HHC will be relatively standard. The only unique MSE equipment other than the MSRT will be in the C-E maintenance section. In addition to the normal maintenance vans, there will be two MSE maintenance shelters and four MSE spare vehicles. Three of the MSE spare vehicles will support the area companies in a contact mode of operation. The area companies will be the same as those found in the division Signal battalion.

The Signal support company (Figure 7) in the area battalion will have a company HQ, an LES platoon, an extension switch support platoon, and a PLRS/JTIDS section. The LES platoon will contain the LES, a cable support facility, a node management shelter, six SESs (V1), two SESs (V2), one LOS radio (V4), and eight LOS radios (V1). This platoon will also have a wire and cable section.

The extension switch support platoon will contain nine LOS radios (V1), six SESs(V1), two SESs (V2), one RAU, one NATO interface facility, and one LOS (V5) NATO interface radio. This platoon will also have a wire/cable section. The PLRS/JTIDS section will be added as an ICP when the equipment is fielded.

There will be only one corps support battalion in the corps Signal brigade (MSE). The support battalion (Figure 8) will consist of an HHC, two area Signal companies, and a Signal support company.

The HHC will be the same as that in the area battalion except it will have one less MSE spares vehicle and two less associated personnel. The area companies will also be the same as previously mentioned. The Signal support company of the support battalion will be structured the same as the Signal support company of the area battalion but will have different amounts of equipment and personnel. The LES platoon will contain an LES, a cable support facility, a management shelter, two SESs (V1), one SES (V2), one LOS radio (V4), three LOS radios (V1), and a cable/wire section. The extension switch support platoon will have four SESs (V1), one SES (V2), one RAU, five LOS radios (V1), one NATO interface, and two NRI facilities. This platoon will also have a cable/wire section. The PLRS/JTIDS section will be implemented as an ICP when the equipment is fielded.

A tremendous amount of effort and thought has gone into structuring the MSE organizations. I would like especially to thank MSgt. Melvin H. Linville, TOE Branch, Organization and Personnel Division, Directorate of Combat Developments, who has been involved with the organization documentation development process for the MSE TOEs. He has provided leadership, continuity, and background and technical knowledge during the entire process.

Mr. Evans, who retired from the Army as a major, is currently a communications specialist at Fort Gordon. He received a B. A. in business from Benedictine College and is now enrolled in Georgia Southern, working on an M. A. in education. He is also a graduate of Signal OCS, Command and General Staff College, and Signal OAC. While in the Army, Mr. Evans served as division artillery officer with the 3rd Armored Division, as commander of A Company, 143rd Signal Battalion, and as an instructor with CELD.