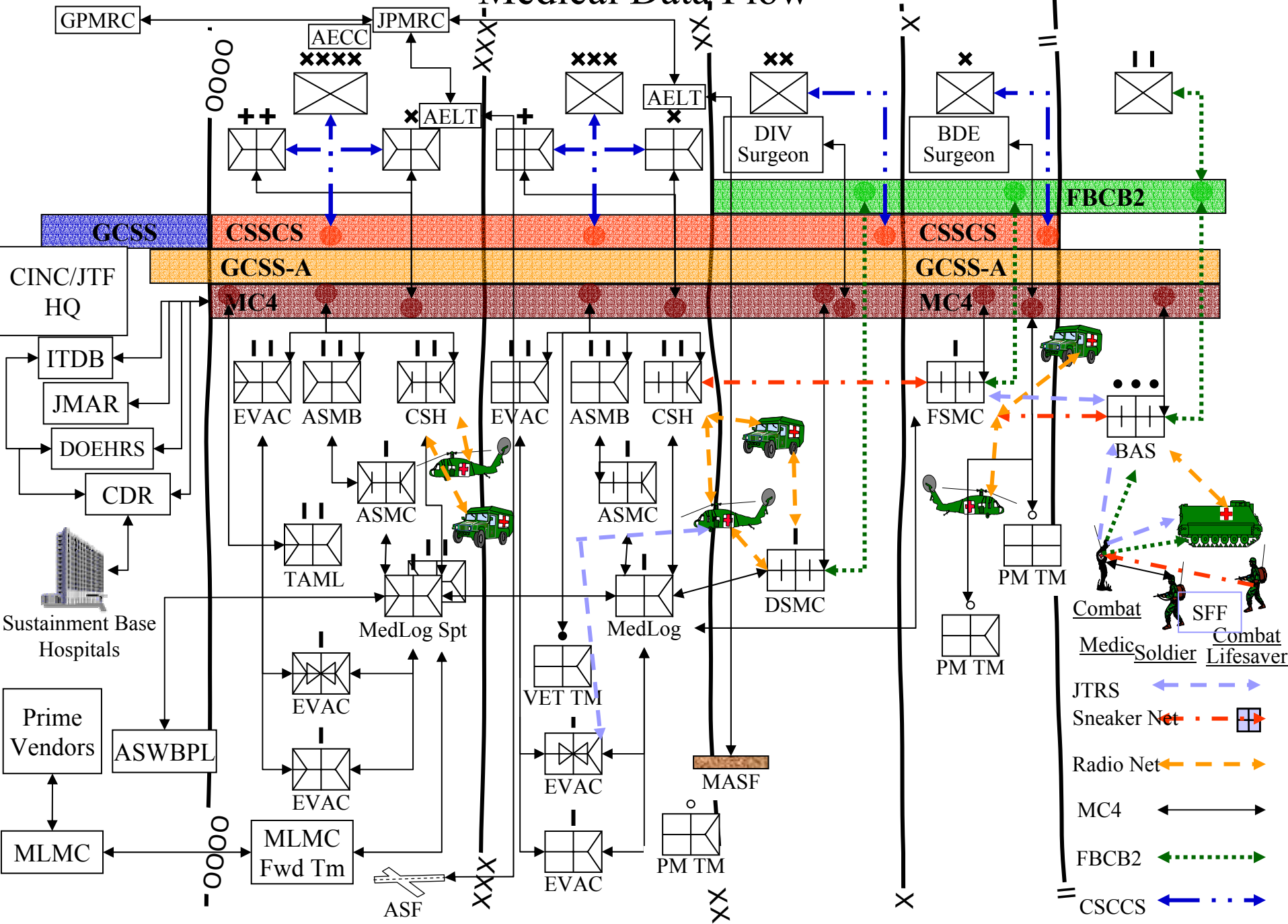Medical Data Flow