PRACTICAL EXERCISE

AN/TYC-39A Disk Drives

INTRODUCTION:

This performance exercise allows you to check and reinforce your understanding of the AN/TYC-39A Disk Drives. Your objective is to correctly answer at least 14 out of 20 questions within 1 hour and isolate 2 out of 3 malfunctions within 30 minutes per fault.

ITEMS YOU WILL NEED FOR THIS EXERCISE:

1. TM 11-5805-790-12-1
2. TM 11-5805-790-12-2
3. TM 11-5805-790-12-8
4. TM 11-5895-1468-34

THE LESSON STRATEGY:

1. You will have 1 hour in which to complete this performance exercise. Mark your answers directly on the performance exercise.

2. When you have completed this performance exercise, turn it into your instructor.

3. If there are no questions you may begin.

4. Isolate 2 out of 3 malfunctions within 30 minutes per fault.

APPLICATION:

1. Using TM 11-5805-790-12-1, TM 11-5805-790-12-2, TM 11-5805-790-12-8, TM 11-5895-1468-34, answer the 20 questions on the practical exercise provided.

   Whenever pronouns or other references denoting gender are appear in this document, they are written to refer to either male or female unless otherwise indicated.

2. When you have completed the exercise have your instructor grade it for you.

3. If it is not clear what you are required to do, ask your instructor for clarification.

4. Isolate 2 out of 3 malfunctions within 30 minutes per fault.

1. What is the function of the DFDD?

_____
_____
_____
_____
_____
_____

2. How many SCSI boards support the DDU?

_____

3. What is the minimum and maximum input voltages to the DFDD?

_____

4. What is the SCSI and Media Data Transfer Rate of the DFDD?

_____

5. What does the busy light indicate on the DFDD?

_____
_____

6. What is the operational altitude of the DFDD?

_____

7. What is the maximum recording density of the FDD?

_____

8. What TM and paragraph number is used for removal and replace procedures?

_____

9. Which circuit breaker turns on FDD B?

_____

10. Which J connector connects power to the DFDD?

_____

11. How many SDSs are there in the AN/TYC-39A?

_____

12. What is the ERROR rate of the SDU?

13. What is purpose of the SDU Locking Bar?

14. What is the purpose of the SDS?

15. How many read/write heads are there in the SDU?

16. What is the purpose of J10 of the SDU?

17. LFIM is ran from which Processor? Explain you answer.

18. While running LFIM what diagnostic code is displayed for a good SDU test?

19. While running LFIM what dose the code 300072 indicate?

20. What is the purpose of J9 of the SDU?

PART TWO FAULT ISOLATION

SYMPTOM:

CORRECTIVE ACTION: _____

REFERENCES USED: _____

SYMPTOM: _____

CORRECTIVE ACTION: _____

REFERENCES USED: _____

SYMPTOM: _____

CORRECTIVE ACTION: _____

REFERENCES USED: _____

PRACTICAL EXERCISE

AN/TYC-39A L-3050V Processor and CAP/Controller Nest

INTRODUCTION:

In this practical exercise your learning objective is to correctly answer 14 out of 20 written questions pertaining to the AN/TYC-39A L-3050V Processor and CAP/Controller Nest within one hour.

ITEMS YOU WILL NEED FOR THIS EXERCISE:

1. TMs 11-5805-790-12-1, 6, 7, 8
2. TMs 11-5805-790-34-1, 2, 3

THE LESSON STRATEGY:

This practical exercise directs you to answer written questions pertaining to the AN/TYC-39A L-3050V Processor and CAP/Controller Nest. The primary aids you will use are TMs 11-5805-790-12-1, 6, 7, 8 and TMs 11-5805-790-34-1, 2, 3.

APPLICATION:

Whenever pronouns or other references denoting gender appear in this document, they are written to refer to either male or female unless otherwise indicated.

1. Write the correct answer in the space provided below each question.

2. Use TMs 11-5805-790-12-1, 6, 7, 8 and TMs 11-5805-790-34-1, 2, 3 as your references.

3. If it is not clear what you are required to do, ask your instructor for clarification.

4. When you have completed the practical exercise, ask your instructor to grade it for you.

1. What is the power consumption of the L-3050V processor?

_____

2. How many megabytes of memory does the L-3050V use in the AN/TYC-39A (delivery configuration)?

_____

3. In what nest and slot would one find the CAPA card?

_____

4. What power processors are used to power the CAP/Controller nest?

_____

5. What channel address is the VDTC-C?

_____

6. What pin on the CAPB cards indicates which card is first and which card is second?

_____

7. What channel number is used by the CAPB card which controls the VDTC-C?

_____

8. What is the function of the CAPB card?

_____

9. How far can a major channel communicate up to?

_____

10. What is RST-1, found in slot 10, used for?

_____

11. What controller corresponds with channel 43?

_____

12. What does the acronym IOSL mean?

_____

13. How many IOSL cards are in the CAP/Controller nest?

_____

14. On what major channel is the SBC XMIT found?

_____

15. How many peripherals can the quad input/output expanders interface with?

_____

16. What is the baud rate that the VDTC provides the VDT?

_____

17. What IOE channel does the LPC-A card use?

_____

18. What cable number and plug number are used in connecting the CAP/Controller nest to line printer B?

_____

19. What IOE channel is used for SDUC-C?

_____

20. What W cable does the IOE 3 on processor #1 use and what nest does it connect to?

_____

PRACTICAL EXERCISE

AN/TYC-39A DATABASE

INTRODUCTION:

This performance exercise provides you with time to practice AN/TYC-39A database and networking procedures. Your objective is to correctly perform all of the procedures in accordance with the TMs, while observing safety precautions. Your ability to perform these procedures, as specified in the lesson standard, will be evaluated during the course examinations.

ITEMS YOU WILL NEED:

Check your workstation to ensure that you have the following items:
1. Student Guide
2. TM 11-5805-790 series
3. Blank Floppy Disks
4. Program Load Device (PLD-B)

If any are missing, notify your instructor.

STRATEGY:

1. To emulate a real scenario, you have been provided with the raw data to build your database. Your task will be to write a database and build a PLD for a working network. You will have 3.0 hours in which to write a database, and 4.0 hours in which to validate the database and construct a network.

2. Use your Tms throughout this exercise.

3. Observe all safety notices and warnings. Be sure to observe all ESD procedures.

4. Respond to all questions within the exercise. Any omissions will be considered incorrect responses.

5. Ask your instructor for assistance if you have any questions and/or problems during this exercise.

6. Upon completion, have your instructor verify and explain any areas of difficulty.

APPLICATION:

1. Write a database to support the dedicated training network. (Use the raw data provided at the end of this exercise.)

   INSTRUCTOR INITIALS _____

2. Using your database, create security and line classmark DBDs via the VTOF utility.

   INSTRUCTOR INITIALS _____

3. Using your DBDs, create a PLD via the TGEN job.

   INSTRUCTOR INITIALS _____

4. Using your new PLD, initialize the system to an on-line state.

   INSTRUCTOR INITIALS _____

5. Verify all circuit connectivity in-house.

   INSTRUCTOR INITIALS _____

6. Verify all circuit connectivity to equipment.

   INSTRUCTOR INITIALS _____

7. Perform network connectivity checks by sending/receiving traffic over all circuits.

   INSTRUCTOR INITIALS _____

SUMMARY:

You have just demonstrated your ability to construct a database and network for the AN/TYC-39A.

AN/TYC-39A NETWORK EXAMPLE

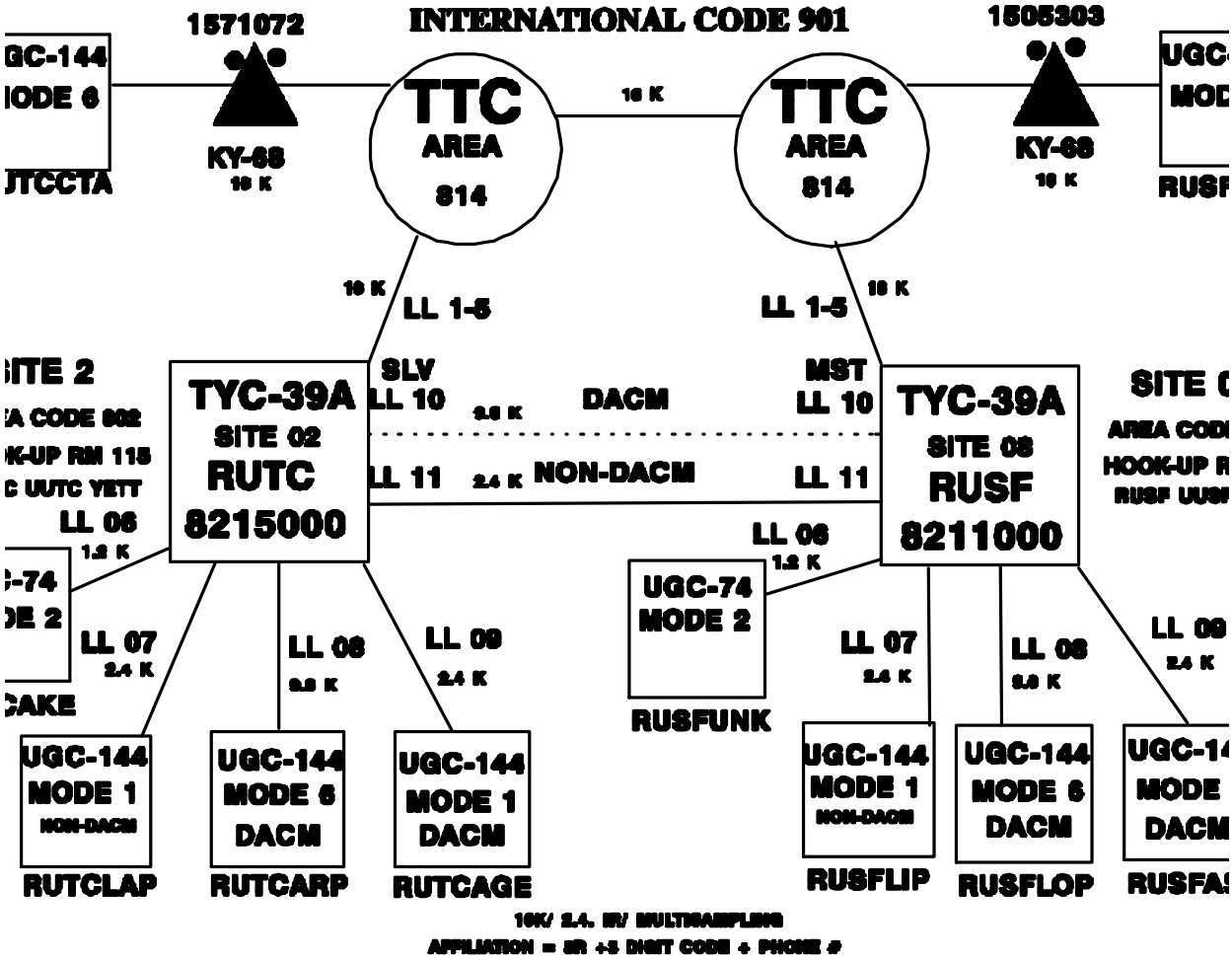

150-74G10\G01-LP3

SITE 02 CS MODE VI LL01-05

LL01-05 LTU 01-05 MD 99 LKG 01-05

LOOP SPEED 16K (32K FOR V4) DTE NUMBER = 1

DMC = YES SLV

RI = RUTCCTA LMF = 8-LEVEL TTY ONLY

TELETYPE LINE SIZE = 80 ERROR CONTROL = MULTI-SAMPLING

FRAMING = NO INFORMATION RATE = 2400

MODE 6 STORAGE = 96 ECP AUTHORIZED

SMRI = RUTCCTA PHONE# = 814 157 1072
815 853 4772 (V4)

DATA ADAPTER TYPE = DISPLAY OR STORAGE, PAPER TAPE AND PAGE PRINTER

SITE 02 LL06

LL06 LTU 06 MD 06 LKG 06

LOOP SPEED 1.2K RI = RUTCAKE

LMF = 8-LEVEL TTY ONLY (JANAP)

TELETYPE LINE SIZE = 80 CD = AKE

FULL START OF MESSAGE STOP BITS = 1

SMRI = RUTCAKE

SITE 02 LL07

LL07 LTU 07 MD 07 LKG 07

LOOP SPEED 2.4K RI = RUTCLAP

LMF = 8-LEVEL TTY ONLY (JANAP) TRANSMISSION MODE = CONTINUOUS

TELETYPE LINE SIZE = 80 SMRI = RUTCLAP

SITE 02 LL08

LL08 LTU 08 MD 08 LKG 08

LOOP SPEED 9.6K DTE NUMBER = 1

DMC = YES MST

RI = RUTCARP LMF = 8-LEVEL TTY ONLY

TELETYPE LINE SIZE = 80 ERROR CONTROL = MULTI-SAMPLING

FRAMING = NO INFORMATION RATE = 2400

MODE 6 STORAGE = 96 ECP AUTHORIZED

SMRI = RUTCARP

DATA ADAPTER TYPE = DISPLAY OR STORAGE, PAPER TAPE AND PAGE PRINTER

SITE 02 LL09

LL09 LTU 09 MD 09 LKG 09

LOOP SPEED 2.4K DTE NUMBER = 1

DMC = YES MASTER

RI = RUTCAGE LMF = 8-LEVEL TTY ONLY

TELETYPE LINE SIZE = 80 ERROR CONTROL = MULTI-SAMPLING

TRANSMISSION MODE = CONTINOUS NO FRAMING

INFORMATION RATE = 2.4K ECP AUTHORIZED

SERVICE MESSAGE RI = RUTCAGE

SITE 02 LL10

LL10 LTU 10 MD 10 LKG 10

LOOP SPEED 9.6K RELAY TYPE = 5
FIRST LINK = LL10

DMC FRAMING = NO

SLAVE INFORMATION RATE = 2.4K

MODE = 6 ERROR CONTROL = MULTI-SAMPLING

SITE 02 LL11

LOOP SPEED 2.4K TRANSMISSION MODE = CONTINUOUS

FIRST LINK = LOGICAL LINE 10

SITE 08 CS MODE VI LL01-05

LL01-05 LTU 01-05 MD 99 LKG 01-05

LOOP SPEED 16K (32K FOR V4) DTE NUMBER = 1

DMC = YES SLV

RI = RUSFCTA LMF = 8-LEVEL TTY ONLY

TELETYPE LINE SIZE = 80 ERROR CONTROL = MULTI-SAMPLING

FRAMING = NO INFORMATION RATE = 2400

MODE 6 STORAGE = 96 ECP AUTHORIZED

SMRI = RUSFCTA PHONE# = 814 157 1072
815 853 4772 (V4)

DATA ADAPTER TYPE = DISPLAY OR STORAGE, PAPER TAPE AND PAGE PRINTER

SITE 08 LL06

LL06 LTU 06 MD 06 LKG 06

LOOP SPEED 1.2K RI = RUSFUNK

LMF = 8-LEVEL TTY ONLY (JANAP)

TELETYPE LINE SIZE = 80 CD = AKE

FULL START OF MESSAGE STOP BITS = 1

SMRI = RUSFUNK

SITE 08 LL07

LL07 LTU 07 MD 07 LKG 07

LOOP SPEED 2.4K RI = RUSFLIP

LMF = 8-LEVEL TTY ONLY (JANAP) TRANSMISSION MODE = CONTINUOUS

TELETYPE LINE SIZE = 80 SMRI = RUSFLIP

SITE 08 LL08

LL08 LTU 08 MD 08 LKG 08

LOOP SPEED 9.6K DTE NUMBER = 1

DMC = YES MST

RI = RUSFLOP LMF = 8-LEVEL TTY ONLY

TELETYPE LINE SIZE = 80 ERROR CONTROL = MULTI-SAMPLING

FRAMING = NO INFORMATION RATE = 2400

MODE 6 STORAGE = 96 ECP AUTHORIZED

SMRI = RUSFLOP

DATA ADAPTER TYPE = DISPLAY OR STORAGE, PAPER TAPE AND PAGE PRINTER

SITE 08 LL09

LL09 LTU 09 MD 09 LKG 09

LOOP SPEED 2.4K DTE NUMBER = 1

DMC = YES MASTER

RI = RUSFAST LMF = 8-LEVEL TTY ONLY

TELETYPE LINE SIZE = 80 ERROR CONTROL = MULTI-SAMPLING

TRANSMISSION MODE = CONTINOUS NO FRAMING

INFORMATION RATE = 2.4K ECP AUTHORIZED

SERVICE MESSAGE RI = RUSFAST

SITE 08 LL10

LL10 LTU 10 MD 10 LKG 10

LOOP SPEED 9.6K RELAY TYPE = 5
FIRST LINK = LL10

DMC FRAMING = NO

SLAVE INFORMATION RATE = 2.4K

MODE = 6 ERROR CONTROL = MULTI-SAMPLING

SITE 08 LL11

LOOP SPEED 2.4K TRANSMISSION MODE = CONTINUOUS

FIRST LINK = LOGICAL LINE 10

AN/UGC-74/DIPHASE MODEM/MODE II

KG-84A SWITCH SETTINGS

CLOCK:	POS 2	SLAVE
DATA MODE:	POS 5	WIRELINE CONDITIONED
STEP PULSE INTERVAL:	POS 1,+0	OFF
TTY MODE:	POS 1	AUTO RESYNC
DATA RATE RX/TX:	A 8	1200
INTERFACE:	POS 2	CA ON
DATA LENGTH:	POS 10	ASCII, 1 STOP BIT
SYNC MODE:	POS 2	RED; A/S
COMM MODE:	POS 1	FULL DUPLEX
XVAR	POS 1	

AN/TYC-39

KG-82	POS 2	DEDICATED
DIPHASE MODEM	J11-J12	MASTER
	J2-3,5-6,8-9	1200

AN/UGC-74 SETUP

MODE:	II
CODE SPEED:	ASCII 1200 BAUD
PARITY:	ASCII ODD PARITY
STATE:	ICT
REC/XMIT:	LO DATA
SIGNAL:	NRZ

AN/UGC-144/KG-84A/DIPHASE MODEM/MODE I/NON-DACB INTERFACE

KG-84A SWITCH SETTINGS

CLOCK:	POS 2	SLAVE
DATA MODE:	POS 5	WIRELINE CONDITIONED
STEP PULSE INTERVAL:	POS 1,+0	OFF
TTY MODE:	POS 1	AUTO RESYNC
DATA RATE RX/TX:	B 1	2400
INTERFACE:	POS 2	CA ON
DATA LENGTH:	POS SYNC	SYNCHRONOUS
SYNC MODE:	POS 2	RED; A/S
COMM MODE:	POS 1	FULL DUPLEX
XVAR	POS 1	

AN/TYC-39

KG-82	POS 2	DEDICATED
DIPHASE MODEM	J11-J12	MASTER
	J2-3,5-6,9-10	2400

AN/UGC-144 SSI SETUP

MASTER/SLAVE:	SLAVE
DACB PROTOCOL:	OFF
CHANNEL CONTROL:	MODE I CONT
MESSAGE CODE/PARITY:	ASCII ODD PARITY
LOOP RATE:	2400
DATA RATE:	2400
ERROR CONTROL:	MULTISAMPLING
SSI INTERFACE:	DLED
AUTO RESYNC:	ON
CLOCK SOURCE:	EXTERNAL
EXT CLOCK POLARITY:	POSITIVE
TRANSMIT SIG SENSE:	MARK POSITIVE
RECEIVE SIG SENSE:	MARK POSITIVE
SERIAL DATA CODE:	NRZ
NO. OF STOP BITS:	N/A
DATA MODE CONTROL:	OFF
MODE VI STORAGE BLKS:	NONE
MODE I ANSWER TIMER:	2 SECS

AN/UGC-144/KG-84A/DIPHASE MODEM/MODE VI/DACB INTERFACE

KG-84A SWITCH SETTINGS

CLOCK:	POS 2	SLAVE
DATA MODE:	POS 5	WIRELINE CONDITIONED
STEP PULSE INTERVAL:	POS 1,+0	OFF
TTY MODE:	POS 1	AUTO RESYNC
DATA RATE RX/TX:	B 4	9600
INTERFACE:	POS 2	CA ON
DATA LENGTH:	POS SYNC	SYNCHRONOUS
SYNC MODE:	POS 2	RED; A/S
COMM MODE:	POS 1	FULL DUPLEX
XVAR	POS 1	

AN/TYC-39

KG-82	POS 2	DEDICATED
DIPHASE MODEM	J11-J12	MASTER
	J2-3,6-7,9-10	9600

AN/UGC-144 SSI SETUP

MASTER/SLAVE:	MASTER
DACB PROTOCOL:	ON
CHANNEL CONTROL:	MODE VI
MESSAGE CODE/PARITY:	ASCII ODD PARITY
LOOP RATE:	9600
DATA RATE:	2400
ERROR CONTROL:	MULTISAMPLING
SSI INTERFACE:	DLED
AUTO RESYNC:	OFF
CLOCK SOURCE:	INTERNAL
EXT CLOCK POLARITY:	POSITIVE
TRANSMIT SIG SENSE:	MARK POSITIVE
RECEIVE SIG SENSE:	MARK POSITIVE
SERIAL DATA CODE:	NRZ
NO. OF STOP BITS:	1
DATA MODE CONTROL:	ON
MODE VI STORAGE BLKS:	96
MODE I ANSWER TIMER:	DEFAULT

KG-84A SWITCH SETTINGS

CLOCK:	POS 2	SLAVE
DATA MODE:	POS 5	WIRELINE CONDITIONED
STEP PULSE INTERVAL:	POS 1,+0	OFF
TTY MODE:	POS 1	AUTO RESYNC
DATA RATE RX/TX:	B 1	2400
INTERFACE:	POS 2	CA ON
DATA LENGTH:	POS SYNC	SYNCHRONOUS
SYNC MODE:	POS 2	RED; A/S
COMM MODE:	POS 1	FULL DUPLEX
XVAR	POS 1	

AN/TYC-39

KG-82	POS 2	DEDICATED
DIPHASE MODEM	J11-J12	MASTER
	J2-3,5-6,9-10	2400

AN/UGC-144 SSI SETUP

MASTER/SLAVE:	SLAVE
DACB PROTOCOL:	ON
CHANNEL CONTROL:	MODE I CONT
MESSAGE CODE/PARITY:	ASCII ODD PARITY
LOOP RATE:	2400
DATA RATE:	2400
ERROR CONTROL:	MULTISAMPLING
SSI INTERFACE:	DLED
AUTO RESYNC:	OFF
CLOCK SOURCE:	INTERNAL
EXT CLOCK POLARITY:	POSITIVE
TRANSMIT SIG SENSE:	MARK POSITIVE
RECEIVE SIG SENSE:	MARK POSITIVE
SERIAL DATA CODE:	NRZ
NO. OF STOP BITS:	N/A
DATA MODE CONTROL:	ON
MODE VI STORAGE BLKS:	NONE
MODE I ANSWER TIMER:	2 SECS

MESSAGE SWITCH TO MESSAGE SWITCH CONTIGENCY LINE

AN/TYC-39A - 02

LINE 10		
KG-82	POS 2	DEDICATED
DIPHASE	J12-13 J2-3,6-7,9-10	SLAVE 9600
LINE 11		
KG-82	POS 2	DEDICATED
DIPHASE	J12-13 J2-3,6-7,9-10	SLAVE 9600

AN/TYC-39A - 08

LINE 10		
KG-82	POS 2	DEDICATED
DIPHASE	J11-12 J2-3,6-7,9-10	MASTER 9600
LINE 11		
KG-82	POS 2	DEDICATED
DIPHASE	J11-12 J2-3,6-7,9-10	MASTER 9600

AN/UGC-144/KY68/MODE VI/DACB INTERFACE
MS TO CS (39D TTC)

AN/UGC-144 SSI SETUP

MASTER/SLAVE:	MASTER
DACB PROTOCOL:	ON
CHANNEL CONTROL:	MODE VI
MESSAGE CODE/PARITY:	ASCII ODD PARITY
LOOP RATE:	16000
DATA RATE:	2400
ERROR CONTROL:	MULTISAMPLING
SSI INTERFACE:	KY68 OR TA1042
AUTO RESYNC:	OFF
CLOCK SOURCE:	INTERNAL
EXT CLOCK POLARITY:	POSITIVE
TRANSMIT SIG SENSE:	MARK POSITIVE
RECEIVE SIG SENSE:	MARK POSITIVE
SERIAL DATA CODE:	NRZ
NO. OF STOP BITS:	1
DATA MODE CONTROL:	ON
MODE VI STORAGE BLKS:	96
MODE I ANSWER TIMER:	DEFAULT

AN/UGC-144/KY68/MODE VI/DACB INTERFACE
MS TO CS (V4 TTC)

AN/UGC-144 SSI SETUP

MASTER/SLAVE:	MASTER
DACB PROTOCOL:	ON
CHANNEL CONTROL:	MODE VI
MESSAGE CODE/PARITY:	ASCII ODD PARITY
LOOP RATE:	32000
DATA RATE:	2400
ERROR CONTROL:	MULTISAMPLING
SSI INTERFACE:	KY68 OR TA1042
AUTO RESYNC:	OFF
CLOCK SOURCE:	INTERNAL
EXT CLOCK POLARITY:	POSITIVE
TRANSMIT SIG SENSE:	MARK POSITIVE
RECEIVE SIG SENSE:	MARK POSITIVE
SERIAL DATA CODE:	NRZ
NO. OF STOP BITS:	1
DATA MODE CONTROL:	ON
MODE VI STORAGE BLKS:	96
MODE I ANSWER TIMER:	DEFAULT

DEDICATED TRAINING NETWORK

SITE 01 DATABASE

```
H■T CRUY SWITCH01
HMCB 01 RUSF UUSF YUSF 2 RUTC UUTC YETT
LADD 10 SD T10 MD10 LKG10 SP12 LK10 G0 CRUY MST DMC
LADD 11 SF T11 MD11 LKG11 SP10 LK10 CRUY CN
LADD 20 M2 US T20 MD20 LKG20 SP09 G0 CR J8 CN FS SM2 RSEC=T
LADD 21 M1 US T21 MD21 LKG21 SP10 G0 CR J8 CN RSEC=T
LADD 22 DA US T22 MD22 LKG22 SP10 G0 CR MST
LADD 23 DA US T23 MD23 LKG23 SP12 G0 CR MST DMC
LADD 30 M1 US T30 MD30 LKG30 SP10 G0 CRY J8 CN AT
RADD YUSFSA EQ YUSFSV
RADD RUTC SF RE5 DD L10 *
RAD* RUTC DD M6 EC0 FR=N IR10 DMC=Y SM=YETTSVA
RADD RUSFUNK LT DC L20 LMFAO C80
RADD RUSFLIP LT DC L21 LMFAO C80
RADD RUSFLOP LT DD L22 D1 SECT LMFAO C80 *
RAD* RUSFLOP M1 CN EC0 FR=N IR10 DMC=Y ECP SM=RUSFLOP
RADD RUSFAST LT DD L23 D1 SECT LMFAO C80 *
RAD* RUSFAST M6 EC0 FR=N IR10 DMC=Y STR96 ECP SM=RUSFAST
RADD YERA LT OAS=Y RE1 DC L30
RADD RUED LT OAS=Y RE5 DC L30 SECT
LRIS 20 SM=RUSFUNK CD=UNK
LRIS 21 SM=RUSFLIP
LRIS 30 SM=YERASVA
SEC RI RUSFCS SECT
SEC RI UUSFCS SECT
SEC SRA TSS ALL
CADD RUCRALL RUSFAST *UNK *LIP *LOP
CDRT YERA YERA YERA
CSST RUSFAST
CDSP RUSFAST
CRRP RUSFAST
```

DEDICATED TRAINING NETWORK

SITE 02 DATABASE

```
H■T CRUY SWITCH02
HMCB 02 RUTC UUTC YETT 1 RUSF UUSF YUSF
LADD 10 SD T10 MD10 LKG10 SP12 LK10 G0 CRUY SLV DMC
LADD 11 SF T11 MD11 LKG11 SP10 LK10 CRUY CN
LADD 20 M2 US T20 MD20 LKG20 SP09 G0 CR J8 CN FS SM2 RSEC=T
LADD 21 M1 US T21 MD21 LKG21 SP10 G0 CR J8 CN RSEC=T
LADD 22 DA US T22 MD22 LKG22 SP10 G0 CR MST
LADD 23 DA US T23 MD23 LKG23 SP12 G0 CR MST DMC
LADD 30 M1 US T30 MD30 LKG30 SP10 G0 CRY J8 CN AT
RADD YETTSA EQ YETTSV
RADD RUSF SF RE5 DD L10 *
RAD* RUSF DD M6 EC0 FR=N IR10 DMC=Y SM=YETTSVA
RADD RUTCOLD LT DC L20 LMFAO C80
RADD RUTCAKE LT DC L21 LMFAO C80
RADD RUTCAGE LT DD L22 D1 SECT LMFAO C80 *
RAD* RUTCAGE M1 CN EC0 FR=N IR10 DMC=Y ECP SM=RUTCAGE
RADD RUTCARP LT DD L23 D1 SECT LMFAO C80 *
RAD* RUTCARP M6 EC0 FR=N IR10 DMC=Y STR96 ECP SM=RUTCARP
RADD YERA LT OAS=Y RE1 DC L30
RADD RUED LT OAS=Y RE5 DC L30 SECT
LRIS 20 SM=RUTCOLD CD=OLD
LRIS 21 SM=RUTCAKE
LRIS 30 SM=YERASVA
SEC RI RUTCCS SECT
SEC RI UUTCCS SECT
SEC SRA TSS ALL
CADD RUCRALL RUTCOLD *AKE *AGE *ARP
CDRT YERA YERA YERA
CSST RUTCARP
CDSP RUTCARP
CRRP RUTCARP
```